PCB terminal block - FRONT 2,5-H/SA10 - 1700040

Please be informed that the data shown in this PDF Document is generated from our Online Catalog. Please find the complete data in the user's documentation. Our General Terms of Use for Downloads are valid (http://download.phoenixcontact.com)



PCB terminal block, Nominal current: 24 A, Nom. voltage: 400 V, Pitch: 5 mm, Number of positions: 1, Connection method: Screw connection, Mounting: Soldering, Conductor/PCB connection direction: 0 °, Color: green, The article can be aligned to create different nos. of positions!

Key commercial data

package_quantity	50
GTIN	4017918022730

Technical data

Dimensions

Length	19.5 mm
Pitch	5 mm
Pin dimensions	0,8 x 0,8 mm
Pin spacing	10 mm
Hole diameter	1.2 mm

General

Range of articles	FRONT 2,5-H/SA10
Insulating material group	I
Rated surge voltage (III/3)	4 kV
Rated surge voltage (III/2)	4 kV
Rated surge voltage (II/2)	4 kV
Rated voltage (III/3)	250 V
Rated voltage (III/2)	400 V
Rated voltage (II/2)	630 V
Connection in acc. with standard	EN-VDE
Nominal current I_N	24 A
Nominal cross section	2.5 mm²
Maximum load current	17.5 A
Insulating material	PA
Solder pin surface	Sn
Inflammability class according to UL 94	V0
Internal cylindrical gage	A3
Stripping length	9 mm
Number of positions	1

PCB terminal block - FRONT 2,5-H/SA10 - 1700040

Technical data

General

Screw thread	M2,5
Tightening torque, min	0.4 Nm
Tightening torque max	0.5 Nm

Connection data

Conductor cross section solid min.	0.2 mm²
Conductor cross section solid max.	2.5 mm²
Conductor cross section stranded min.	0.2 mm²
Conductor cross section stranded max.	2.5 mm²
Conductor cross section stranded, with ferrule without plastic sleeve min.	0.25 mm²
Conductor cross section stranded, with ferrule without plastic sleeve max.	1.5 mm²
Conductor cross section stranded, with ferrule with plastic sleeve min.	0.25 mm²
Conductor cross section stranded, with ferrule with plastic sleeve max.	1.5 mm²
Conductor cross section AWG/kcmil min.	24
Conductor cross section AWG/kcmil max	14
2 conductors with same cross section, solid min.	0.2 mm²
2 conductors with same cross section, solid max.	0.75 mm²
2 conductors with same cross section, stranded min.	0.2 mm²
2 conductors with same cross section, stranded max.	0.75 mm²
2 conductors with same cross section, stranded, ferrules without plastic sleeve, min.	0.25 mm²
2 conductors with same cross section, stranded, ferrules without plastic sleeve, max.	0.34 mm²
Minimum AWG according to UL/CUL	30
Maximum AWG according to UL/CUL	12

classifications

eCl@ss

eCl@ss 4.0	27141109
eCl@ss 4.1	27141109
eCl@ss 5.0	27141190
eCl@ss 5.1	27141190
eCl@ss 6.0	27261101
eCl@ss 7.0	27440401
eCl@ss 8.0	27440401

ETIM

ETIM 3.0	EC001121
ETIM 4.0	EC002643
ETIM 5.0	EC002643

PCB terminal block - FRONT 2,5-H/SA10 - 1700040

classifications

UNSPSC

UNSPSC 6.01	30211801
UNSPSC 7.0901	39121432
UNSPSC 11	39121432
UNSPSC 12.01	39121432
UNSPSC 13.2	39121432

approvals

CSA / UL Recognized / cUL Recognized / GOST / GL / RS / GOST / cULus Recognized /

Approval details

CSA

Usegroups	**B**	**D**
Nominal voltage UN	300 V	300 V
Nominal current IN	10 A	10 A
mm²/AWG/kcmil	24-12	24-12

UL Recognized

Usegroups	**B**	**C**	**D**
Nominal voltage UN	250 V	300 V	300 V
Nominal current IN	10 A	17 A	10 A
mm²/AWG/kcmil	30-12	30-12	30-12

cUL Recognized

Usegroups	**B**	**C**	**D**
Nominal voltage UN	250 V	300 V	300 V
Nominal current IN	10 A	17 A	10 A
mm²/AWG/kcmil	30-12	30-12	30-12

GOST

GL

PCB terminal block - FRONT 2,5-H/SA10 - 1700040

approvals

RS

cULus Recognized

accessories

End cover

D-FRONT 2,5-H-O.Z. - 1700024



Pitch spacer

RZ 2,5-FRONT 2,5 H - 1700079



Screwdriver tools

SZS 0,6X3,5 - 1205053



Labeled terminal marker

PCB terminal block - FRONT 2,5-H/SA10 - 1700040

accessories

SK 5/3,8:FORTL.ZAHLEN - 0804183



Terminal marking

SK U/3,8 WH:UNBEDRUCKT - 0803906



SK 5/3,8:UNBEDRUCKT - 0805409



Marker pen

B-STIFT - 1051993



Bridge

EBP 2- 5 - 1733169



PCB terminal block - FRONT 2,5-H/SA10 - 1700040

accessories

SK 5/3,8:SO - 0805072



Drawings

Drilling diagram

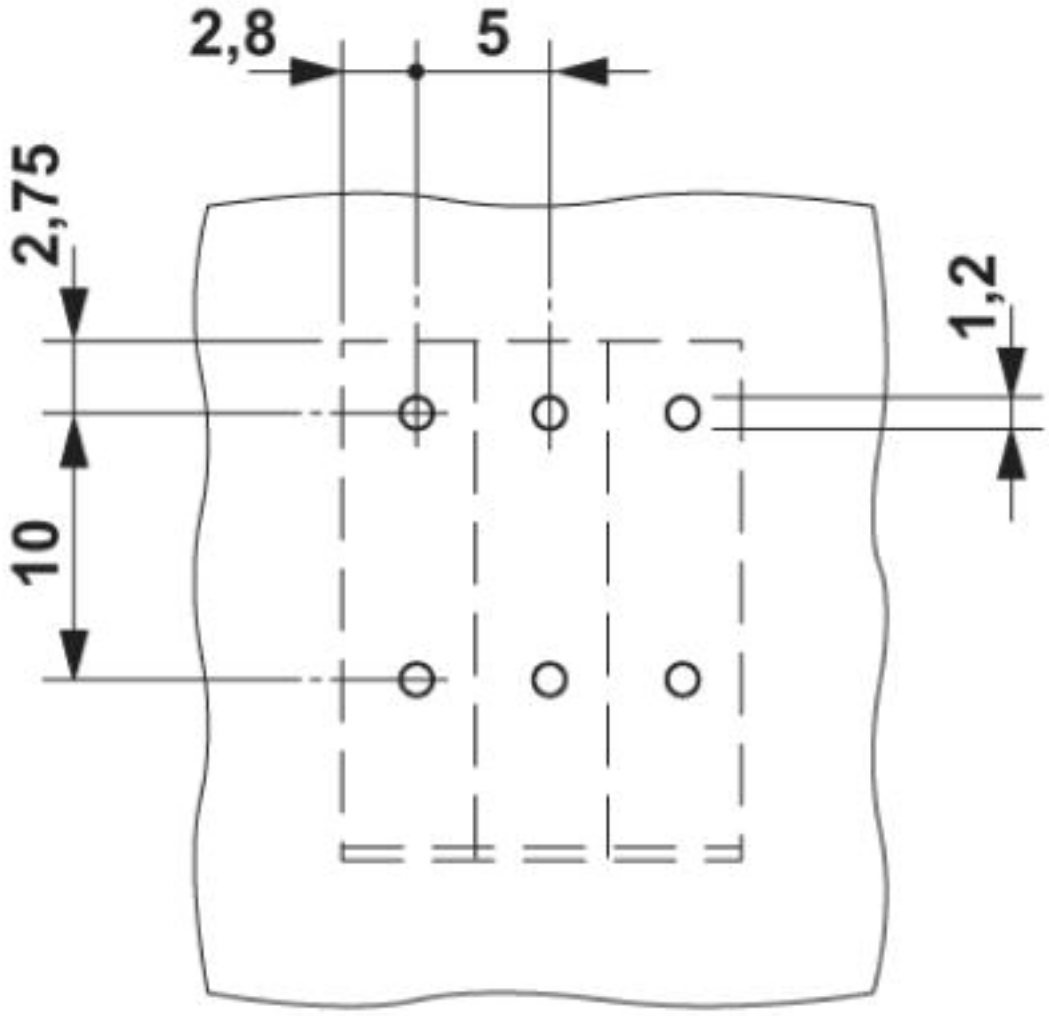

PCB terminal block - FRONT 2,5-H/SA10 - 1700040

Dimensioned drawing

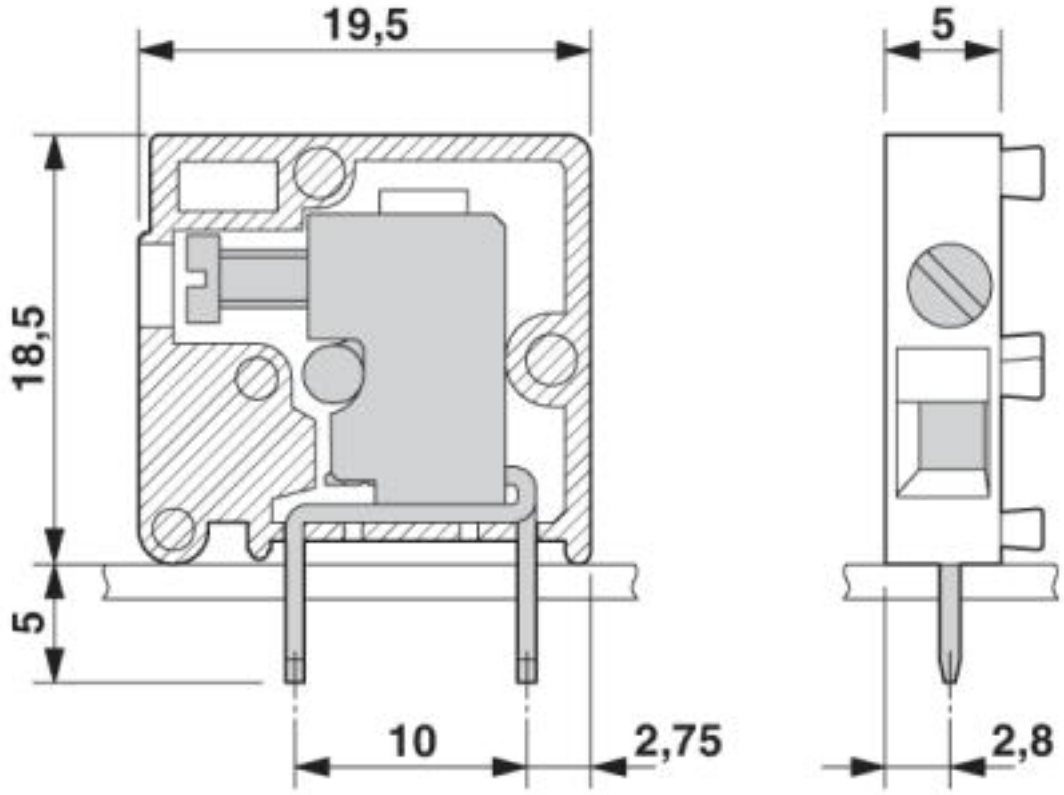

© Phoenix Contact 2013 - all rights reserved
http://www.phoenixcontact.com