Bus system flat-type plug - SACCEC-M12MS-5CON-M16/ 5,0-920 - 1525652

Please be informed that the data shown in this PDF Document is generated from our Online Catalog. Please find the complete data in the user's documentation. Our General Terms of Use for Downloads are valid (http://download.phoenixcontact.com)



Bus system flush-type plug, DeviceNet/CANopen, 5-pos., M12, shielded, A-coded, front/screw mounting with M16 thread, with 5 m bus cable, 2 x 0.2 mm², 2 x 0.32 mm²

Key commercial data

package_quantity	1
GTIN	4046356022392

Technical data

Dimensions

Length of cable	5 m

Ambient conditions

Ambient temperature (operation)	-25 °C ... 85 °C (Plug / socket)
Degree of protection	IP67

General

Rated current at 40°C	4 A
Rated voltage	60 V
Number of positions	5
Contact resistance	≤ 3 mΩ
Insulation resistance	≥ 100 MΩ
Coding	A - standard
Standards/regulations	M12 connector IEC 61076-2-101
Status display	No
Surge voltage category	II
Pollution degree	3
Test voltage	2500 V
Connection method	CAN Bus / DeviceNet
Mounting type	Front mounting M16 x 1.5 With locking nut

Material

Inflammability class according to UL 94	V0
Contact material	CuZn

Bus system flat-type plug - SACCEC-M12MS-5CON-M16/ 5,0-920 - 1525652

Technical data

Material

Contact surface material	Ni/Au
Contact carrier material	PA 66
Material, knurls	Nickel-plated brass
Sealing material	NBR

Cable

Cable type	CAN Bus/DeviceNet
Cable type (abbreviation)	920
Conductor cross section	2x 0.25 mm² (signal line)
Conductor cross section	2x 0.34 mm² (Power supply)
Conductor cross section	1x 0.34 mm² (Drain wire)
AWG signal line	24
AWG power supply	22
Conductor structure signal line	19x 0.13 mm
Conductor structure, voltage supply	19x 0.15 mm
Core diameter including insulation	1.95 mm ±0.05 mm (signal line)
Core diameter including insulation	1.4 mm ±0.05 mm (Power supply)
Wire colors	Red-black, blue-white
Twisted pairs	2 cores to the pair
Type of pair shielding	Aluminum-lined polyester foil
Overall twist	2 pairs around a drain wire in the center to the core
Shielding	Tinned copper braided shield
Optical shield covering	80 %
External sheath, color	Violet, RAL 4001
External cable diameter D	6.7 mm ±0.3 mm
Smallest bending radius, fixed installation	67 mm
Smallest bending radius, movable installation	67 mm
Number of bending cycles	2000000
Bending radius	67 mm
Traversing path	4.5 m
Traversing rate	3 m/s
Acceleration	3 m/s²
Outer sheath, material	PUR
Material conductor insulation	Foamed PE (signal line)
Material conductor insulation	PE (Power supply)
Conductor material	Tin-plated Cu litz wires
Insulation resistance	≥ 5 GΩ*km (signal line)
Insulation resistance	≥ 5 GΩ*km (Power supply)
Working capacitance	nom. 40 nF (signal line)
Wave impedance	120 Ω ± 12 Ω (with 1 MHz)

Bus system flat-type plug - SACCEC-M12MS-5CON-M16/ 5,0-920 - 1525652

Technical data

Cable

Nominal voltage, cable	max. 300 V
Test voltage, cable	2000 V (50 Hz, 1 min.)
Flame resistance	UL 1581, Sec. 1060 (FT-1)
Flame resistance	IEC 60332-1
Ambient temperature (operation)	-40 °C ... 80 °C (cable, fixed installation)
Ambient temperature (operation)	-20 °C ... 70 °C (cable, flexible installation)

classifications

eCl@ss

eCl@ss 4.0	27140815
eCl@ss 4.1	27140815
eCl@ss 5.0	27143423
eCl@ss 5.1	27143423
eCl@ss 6.0	27143423
eCl@ss 7.0	27449001
eCl@ss 8.0	27449001

ETIM

ETIM 2.0	EC001297
ETIM 3.0	EC002061
ETIM 4.0	EC002061
ETIM 5.0	EC002061

UNSPSC

UNSPSC 6.01	31251501
UNSPSC 7.0901	31251501
UNSPSC 11	31251501
UNSPSC 12.01	31251501
UNSPSC 13.2	31251501

approvals

GOST / GOST /

Approval details

GOST

Bus system flat-type plug - SACCEC-M12MS-5CON-M16/ 5,0-920 - 1525652

approvals

Drawings

Dimensioned drawing

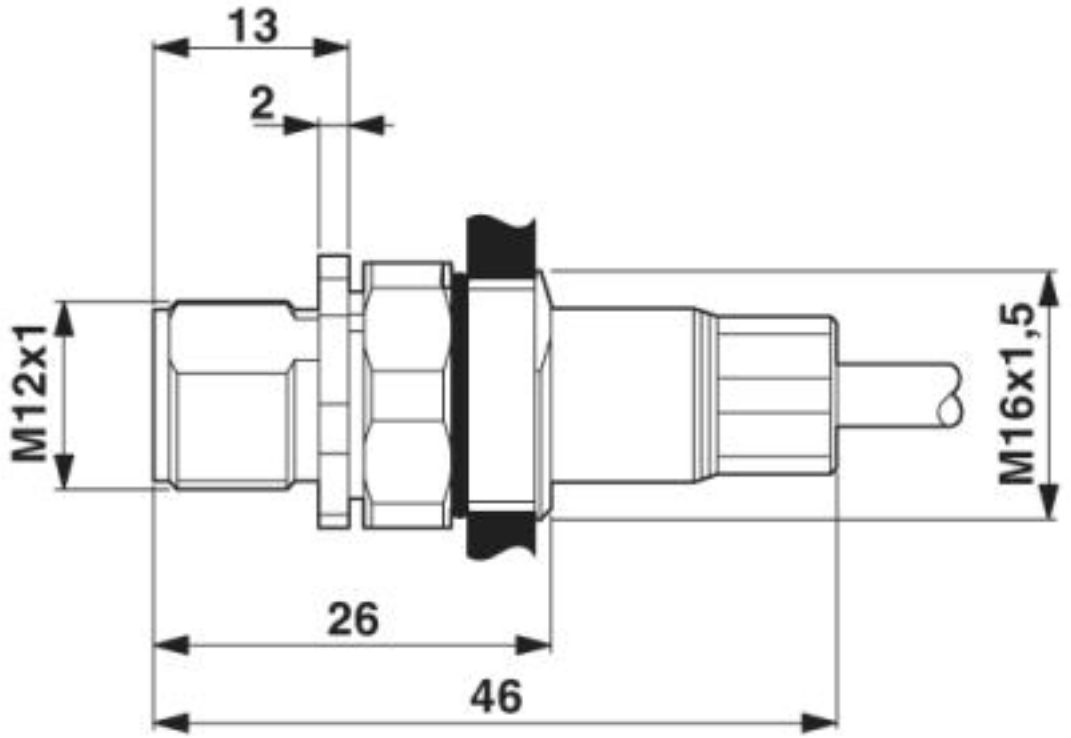

M12 flush-type plug

Bus system flat-type plug - SACCEC-M12MS-5CON-M16/ 5,0-920 - 1525652

Dimensioned drawing

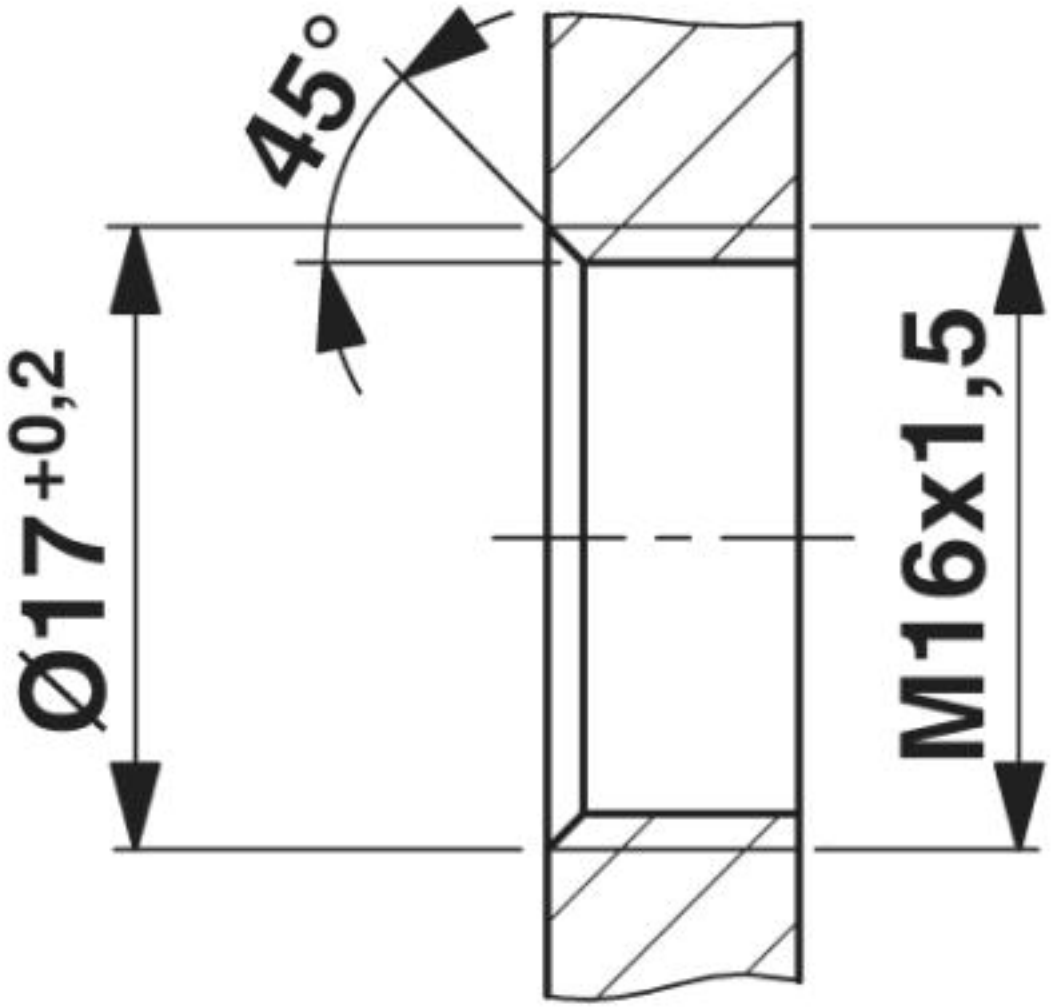

Housing cutout for M16 fastening thread, mounting panel with thread

Bus system flat-type plug - SACCEC-M12MS-5CON-M16/ 5,0-920 - 1525652

Circuit diagram

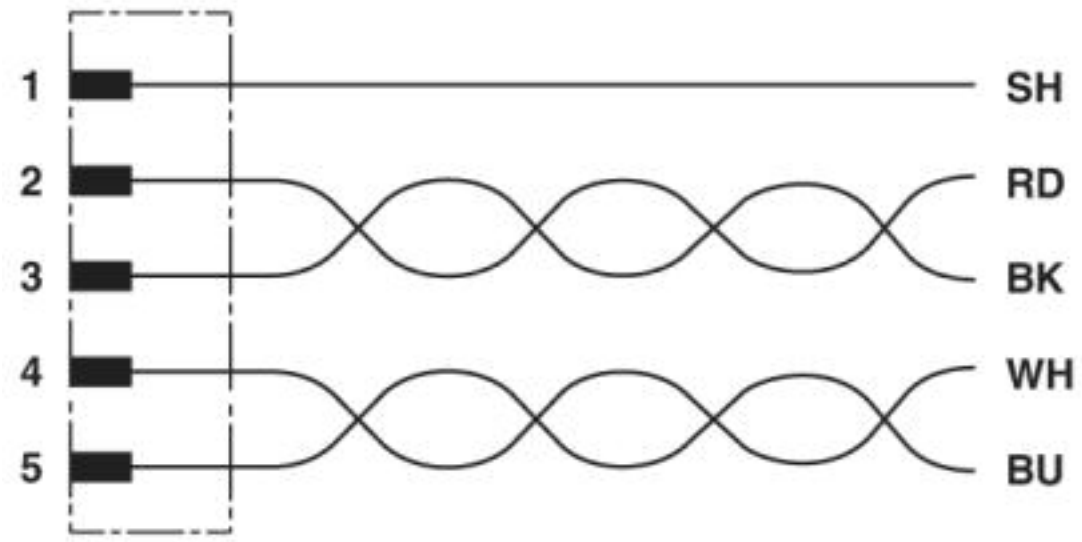

Contact assignment of the M12 plug

Bus system flat-type plug - SACCEC-M12MS-5CON-M16/ 5,0-920 - 1525652

Schematic diagram

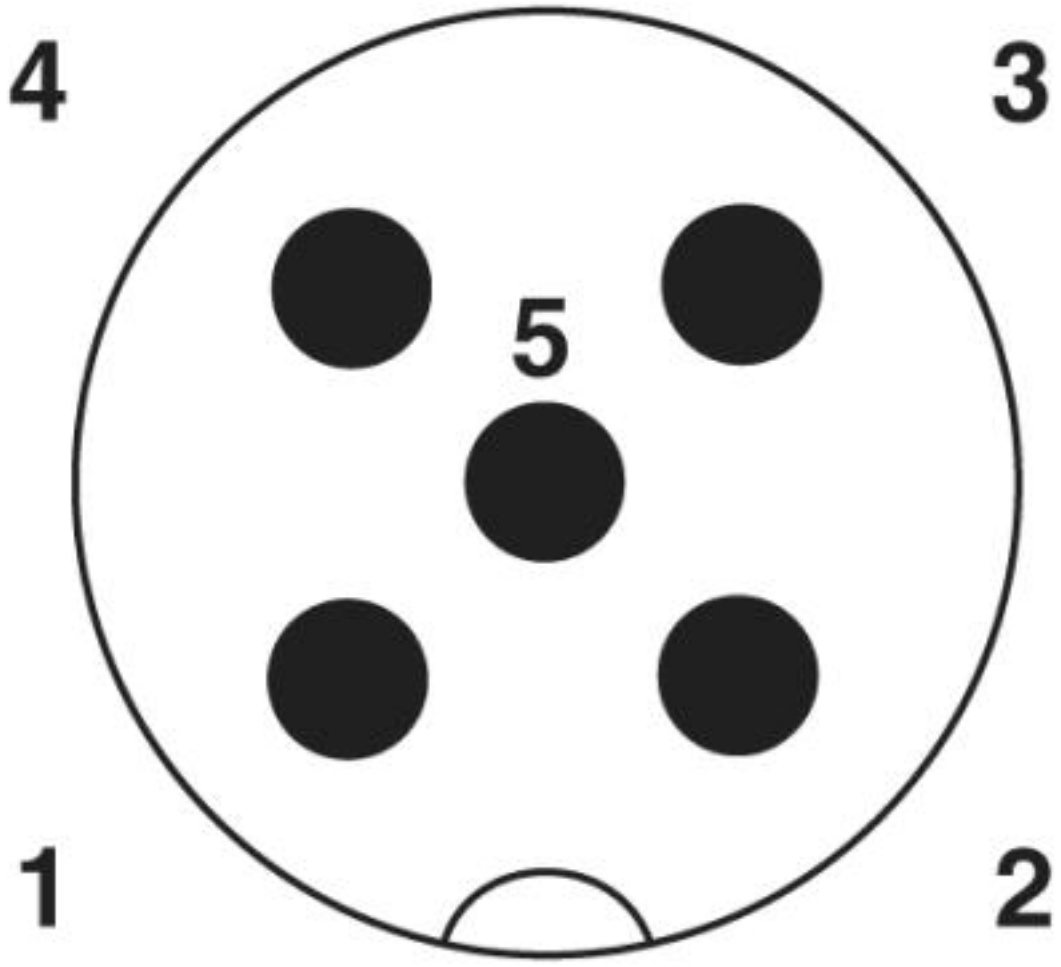

Pin assignment M12 male connector, 5-pos., A-coded, male side

Bus system flat-type plug - SACCEC-M12MS-5CON-M16/ 5,0-920 - 1525652

Cable cross section



CAN Bus/DeviceNet [920]

© Phoenix Contact 2013 - all rights reserved
http://www.phoenixcontact.com