SPECIFICATION FOR PIEZOELECTRIC SOUNDER

1. Scope

This specification is applied to the piezoelectric sounder which is used for alarm systems.

2. Item No.: LF-PE24P40A

3. Ratings

* Operating Temperature Range: - 20 °C ~+ 70 °C
* Storage Temperature Range: - 40 °C ~+ 80°C
* Maximum Input Voltage: 30 Vp-p max.
* Case material: ABS UL94HB

4. Outline Drawing and Dimensions

* Appearance: No visible damage and dirt
* Dimensions: as per Fig. 1

5. Electrical Requirements

	Items	Specifications	Test Conditions
5-1.	Sound Pressure Level	94 dB min.	Input Signal: 9 Vp-p 4000Hz Square wave Distance:10 cm *as per Fig. 2
5-2.	Capacitance	25,000 pF ± 30%	at 120 Hz

* Electrical Requirements should be specified at room temperature and humidity.
(Ref. Temperature: 25 ± 3°C, Humidity: 60 ± 10% RH)

6. Physical Characteristics

	Test Item	Test Conditions	Performance Requirements
6-1.	Vibration	Sounder shall be measured after being applied vibration of amplitude of 1.5 mm with 10 to 55 Hz band of vibration frequency to each three mutually perpendicular directions for 2 hours.	The measured values shall meet Table 1.
6-2.	Wire Pull Strength	On the ceramic disc, Horizontal: 500g min. Vertical: 300g min.	No break on the wire. No electrode dislodge on the disc.

7. Environmental Characteristics

	Test Items	Test Conditions	Performance Requirements
7-1.	High Temperature	After being placed in a chamber with +85 ± 2°C for 240 hours and then being placed in natural condition for 4 hours, sounder shall be measured.	The measured values shall meet Table 1.
7-2.	Low Temperature	After being placed in a chamber with -40 ± 2°C for 240 hours and then being placed in natural condition for 4 hours, sounder shall be measured.	
7-3.	Humidity	After being placed in a chamber with 90 to 95% R.H. at + 40 ± 2°C for 240 hours and Then being placed in natural condition for 4 hours, sounder shall be measured.	
7-4.	Temperature Cycle	After being placed in a chamber at -40 ± 2°C for 30 minutes, sounder shall be placed at room temperature (+20°C). After 15 minutes at this temperature, sounder shall be placed in a chamber at +85 ± 2°C. After 30 minutes at this temperature, sounder shall be returned to room temperature (+20°C) for 15 minutes. After 5 above cycles, sounder shall measured after being placed in natural condition for hours.	

Table 1

Items	Performance Requirements
Sound Pressure Level	Initial Value ± 10 dB

8. Others

8-1. Please pay attention never to be applied DC voltage to piezo sounder.

8-2. Please pay attention to protect operating circuit from surge voltage provided by something for force such as falling, shock and temperature changing.

8-3. The resistor should be used as shown in Fig. A. A suitable resistance value should be chosen. Instead of this measure, a diode may also be applied as shown in Fig. B.

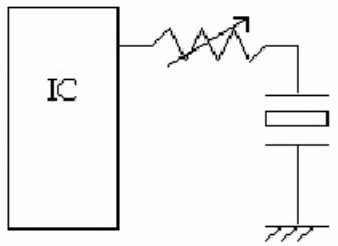

Fig. A

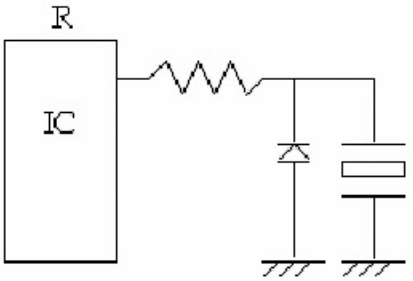

Fig. B

8-4. This specification mentions the quality of the component as a single unit. Please insure the component is thoroughly evaluated in your application circuit.

8-5. Please do not use this component in any application that deviates from its intended use as noted within the specification. It may cause any mishaps.

9. Remark

At the same spec of material changed without notice, due to the environmental protection, material sources and process improvement norms etc.

Dimensions Unit: mm±0.5

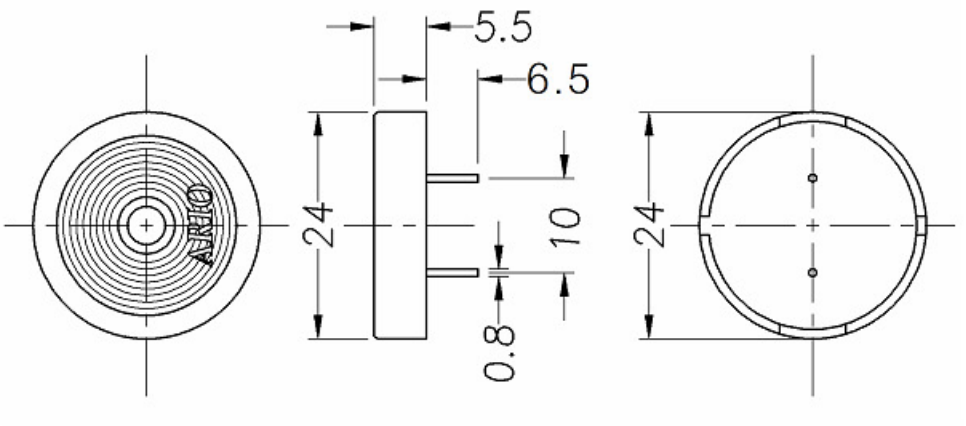

Fig. 1

Test Circuit

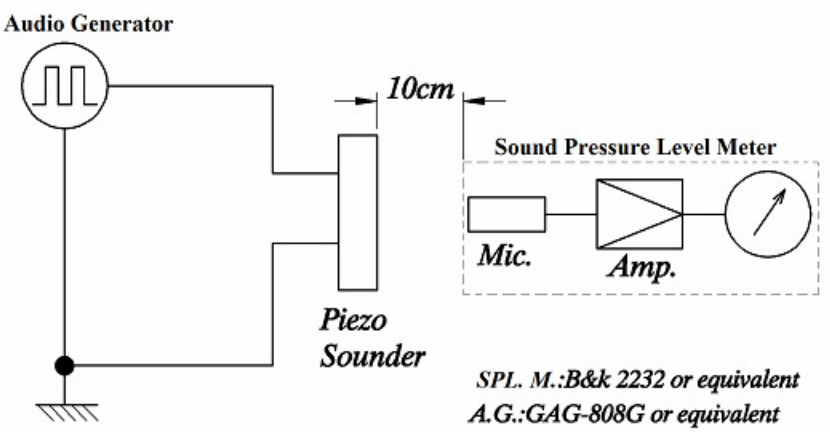

Fig. 2
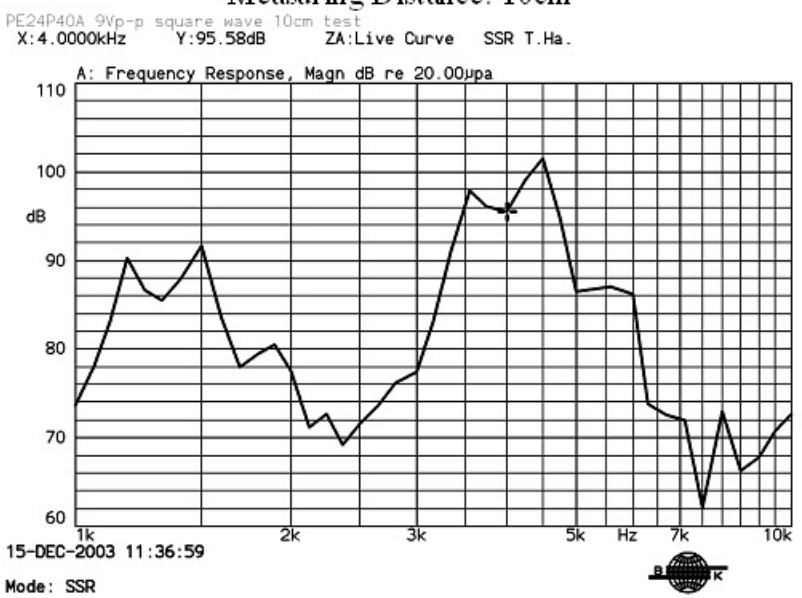
FREQUENCY RESPONSE CURVE OF LF-PE24P40A
Input Voltage: 9Vp-p Square Wave
Measuring Distance: 10cm