Flush-type connector - SACCBP-MS-5CON-M16/2,0-PUR SCO - 1419412

Please be informed that the data shown in this PDF Document is generated from our Online Catalog. Please find the complete data in the user's documentation. Our General Terms of Use for Downloads are valid (http://download.phoenixcontact.com)



Flush-type plug, shielded, 5-pos., M12, A-coded, rear/screw mounting with M16 thread, with 2 m cable, 5 x 0.34 mm²

Key commercial data

package_quantity	1
GTIN	4046356533300

Technical data

Dimensions

Length of cable	2 m

Ambient conditions

Degree of protection	IP67

General

Rated current at 40°C	4 A
Rated voltage	60 V
Number of positions	5
Contact resistance	≤ 3 mΩ
Insulation resistance	≥ 100 MΩ
Coding	A - standard
Standards/regulations	M12 connector IEC 61076-2-101
Status display	No
Surge voltage category	II
Pollution degree	3
Mounting type	Rear mounting M16 x 1.5 With flat nut

Material

Inflammability class according to UL 94	V0
Contact material	CuZn
Contact surface material	Au
Contact carrier material	PA 66

Flush-type connector - SACCBP-MS-5CON-M16/2,0-PUR SCO - 1419412

Technical data

Material

Material, knurls	Zinc die-cast, nickel-plated
Sealing material	NBR

Cable

Cable type	PUR halogen-free black
Cable abbreviation	Li9Y-V1-C-V1-11Y
AWG signal line	22
Wire colors	Brown, white, blue, black, gray
Overall twist	5 wires around filler to the core
Shielding	Braided copper wires
Optical shield covering	85 %
External sheath, color	Black-gray RAL 7021
External cable diameter	5.90 mm
Cable weight	48 kg/km
Outer sheath, material	PUR
Material, filler	PE
Conductor material	Bare Cu litz wires

classifications

eCl@ss

eCl@ss 4.0	27140815
eCl@ss 4.1	27140815
eCl@ss 5.0	27143423
eCl@ss 5.1	27143423
eCl@ss 6.0	27279220
eCl@ss 7.0	27440103
eCl@ss 8.0	27440103

ETIM

ETIM 2.0	EC001297
ETIM 3.0	EC002061
ETIM 4.0	EC002061
ETIM 5.0	EC002061

UNSPSC

UNSPSC 6.01	31251501
UNSPSC 7.0901	31251501
UNSPSC 11	31251501
UNSPSC 12.01	31251501
UNSPSC 13.2	39121413

Flush-type connector - SACCBP-MS-5CON-M16/2,0-PUR SCO - 1419412

approvals

GOST / GOST /

Approval details

GOST

accessories

Plug for cable screw gland

SACC-M16-SEALING PLUG SET - 1453368



Drawings

Flush-type connector - SACCBP-MS-5CON-M16/2,0-PUR SCO - 1419412

Dimensioned drawing

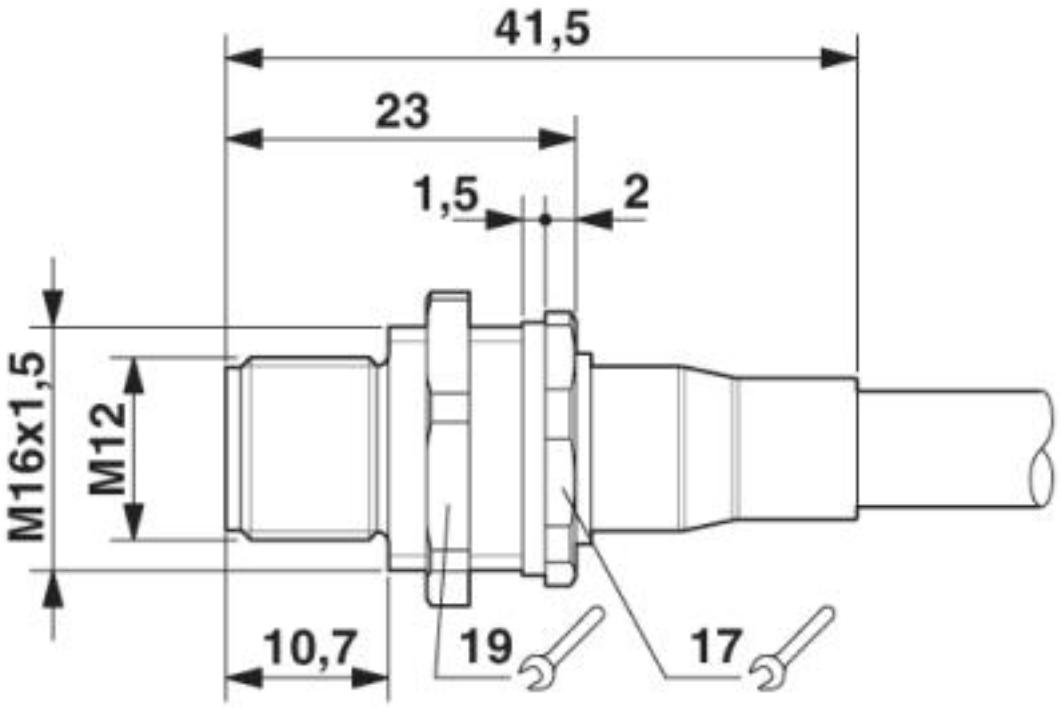

M12 flush-type connector

Flush-type connector - SACCBP-MS-5CON-M16/2,0-PUR SCO - 1419412

Dimensioned drawing

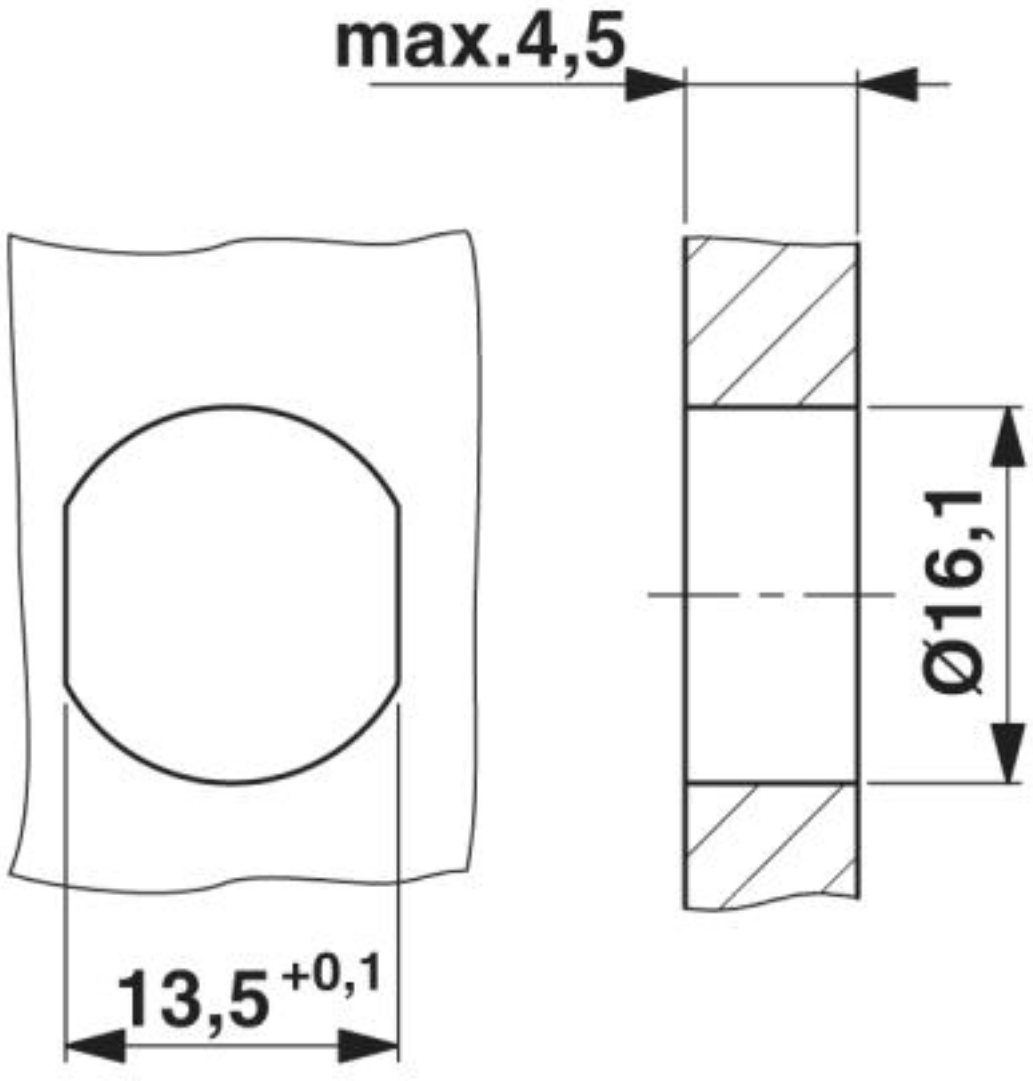

Housing cutout for M16 fastening thread, mounting panel with feed-through hole (alternatively with surface as protection against rotation)

Flush-type connector - SACCBP-MS-5CON-M16/2,0-PUR SCO - 1419412

Circuit diagram

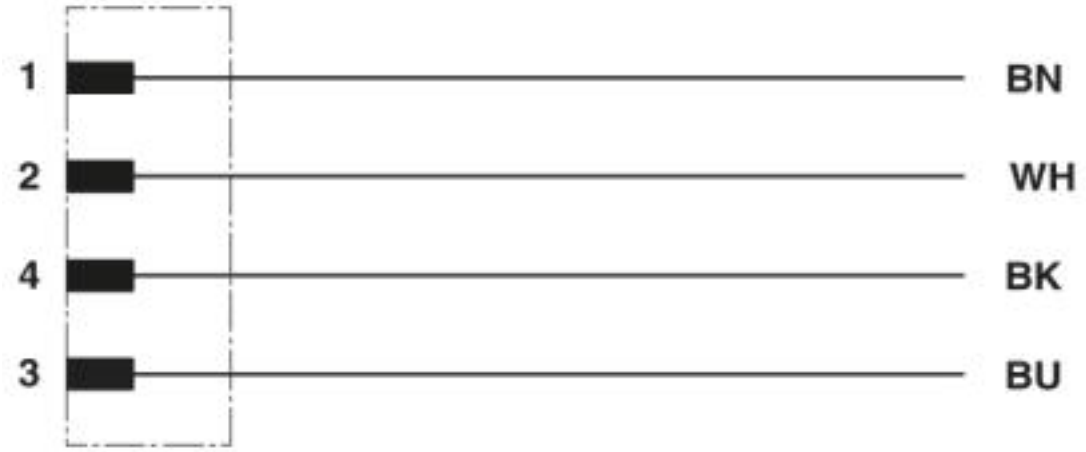

Contact assignment of the M12 plugs

Flush-type connector - SACCBP-MS-5CON-M16/2,0-PUR SCO - 1419412

Schematic diagram

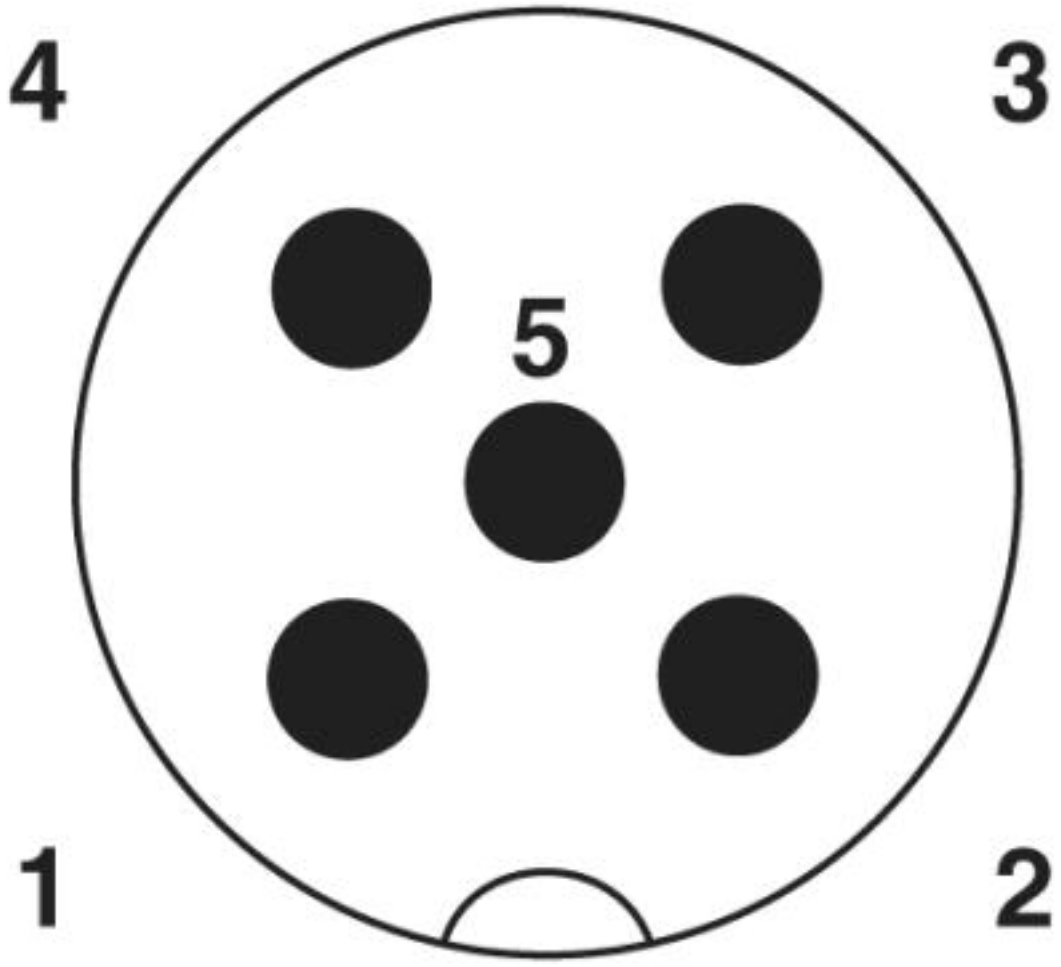

Pin assignment M12 connector, 5-pos., A-coded, socket side view

Flush-type connector - SACCBP-MS-5CON-M16/2,0-PUR SCO - 1419412

Cable cross section



PUR halogen-free black shielded [PUR]

© Phoenix Contact 2013 - all rights reserved
http://www.phoenixcontact.com