Sensor/Actuator cable - SAC-3P-M8Y/2X0,3-PUR/M 8FR - 1458703

Please be informed that the data shown in this PDF Document is generated from our Online Catalog. Please find the complete data in the user's documentation. Our General Terms of Use for Downloads are valid (http://download.phoenixcontact.com)



Sensor/Actuator cable, 3-position, PUR halogen-free, Black-gray RAL 7021, Plug straight M8, on Socket angled M8 and Socket angled M8, Cable length: 0.3 m

Key commercial data

package_quantity	1
GTIN	4046356638050

Technical data

Dimensions

Length of cable	0.3 m

Ambient conditions

Ambient temperature (operation)	-25 °C ... 90 °C (Plug / socket)
Degree of protection	IP65
Degree of protection	IP67
Degree of protection	IP68

General

Rated current at 40°C	4 A
Rated voltage	30 V
Number of positions	3
Contact resistance	≤ 5 mΩ
Insulation resistance	≥ 100 MΩ
Coding	A - standard
Standards/regulations	M8 connector IEC 61076-2-104
Status display	No
Surge voltage category	II
Pollution degree	3
Torque	0.2 Nm (M8 knurl)

Material

Inflammability class according to UL 94	HB
Contact material	CuSn
Contact surface material	Ni/Au
Contact carrier material	TPU GF

Sensor/Actuator cable - SAC-3P-M8Y/2X0,3-PUR/M 8FR - 1458703

Technical data

Material

Material of grip body	TPU, hardly inflammable, self-extinguishing
Material, knurls	Zinc die-cast, nickel-plated
Sealing material	NBR

Cable

Cable type	PUR halogen-free black
Cable type (abbreviation)	PUR
Cable abbreviation	Li9Y11Y-HF
UL AWM style	20549
Conductor cross section	3x 0.25 mm² (signal line)
AWG signal line	24
Conductor structure signal line	32x 0.10 mm
Core diameter including insulation	1.17 mm ±0.02 mm (signal line)
Thickness, insulation	≥ 0.38 mm (Core insulation)
Thickness, insulation	approx. 0.9 mm (Outer cable sheath)
Wire colors	brown, blue, black
Overall twist	3 wires, twisted
Length of twist, overall twist	40 mm
External sheath, color	Black-gray RAL 7021
External cable diameter D	4.4 mm ±0.15 mm
Smallest bending radius, fixed installation	22 mm
Smallest bending radius, movable installation	44 mm
Number of bending cycles	4000000
Bending radius	44 mm
Traversing path	10 m
Traversing rate	3 m/s
Acceleration	10 m/s²
Cable weight	24 kg/km
Outer sheath, material	PUR
Material conductor insulation	PP
Conductor material	Bare Cu litz wires
Insulation resistance	≥ 100 GΩ*km (at 20 °C)
Conductor resistance	≤ 78 Ω/km (at 20 °C)
Nominal voltage, cable	≤ 300 V
Test voltage, cable	≥ 3000 V
Special properties	Flexible cable conduit capable
Special properties	Silicone-free
Special properties	Free of substances which would hinder coating with paint or varnish
Flame resistance	in accordance with DIN UL-Style 20549
Halogen-free	in accordance with DIN VDE 0472 part 815
Resistance to oil	in accordance with DIN EN 60811-2-1

Sensor/Actuator cable - SAC-3P-M8Y/2X0,3-PUR/M 8FR - 1458703

Technical data

Cable

Other resistance	hydrolysis and microbe resistant
Other resistance	Highly resistant to acids, alkaline solutions and solvents
Other resistance	Resistant to salt water
Other resistance	partly UV-resistant in accordance with DIN EN ISO 4892-2-A
Ambient temperature (operation)	-40 °C ... 80 °C (cable, fixed installation)
Ambient temperature (operation)	-25 °C ... 80 °C (cable, flexible installation)

classifications

eCl@ss

eCl@ss 4.0	27060306
eCl@ss 4.1	27060306
eCl@ss 5.0	27061801
eCl@ss 5.1	27061801
eCl@ss 6.0	27061801
eCl@ss 7.0	27061801
eCl@ss 8.0	27061801

ETIM

ETIM 4.0	EC001855
ETIM 5.0	EC001855

UNSPSC

UNSPSC 6.01	31251501
UNSPSC 7.0901	31251501
UNSPSC 11	31251501
UNSPSC 12.01	31251501
UNSPSC 13.2	31251501

approvals

UL Listed / cUL Listed / cULus Listed /

Approval details

UL Listed

Nominal voltage UN	30 V
Nominal current IN	4 A
mm²/AWG/kcmil	

Sensor/Actuator cable - SAC-3P-M8Y/2X0,3-PUR/M 8FR - 1458703

approvals

cUL Listed

Nominal voltage UN	30 V
Nominal current IN	4 A
mm²/AWG/kcmil	

cULus Listed

accessories

Torque tool

TSD 02 SAC - 1208487



Screwdriver tools

SAC BIT M8-D10 - 1208461



Protective cap

PROT-M8 - 1682540



Conductor marking

Sensor/Actuator cable - SAC-3P-M8Y/2X0,3-PUR/M 8FR - 1458703

accessories

PABA WH/15 - 1013151



PABA YE/15 - 1013698



PABA RD/15 - 1013944



Labeled conductor marker

PABA WH/15 CUS - 0824444



PABA YE/15 CUS - 0824447



Sensor/Actuator cable - SAC-3P-M8Y/2X0,3-PUR/M 8FR - 1458703

accessories

PABA RD/15 CUS - 0824442



PABA BU/15 CUS - 0824441



Drawings

Dimensioned drawing

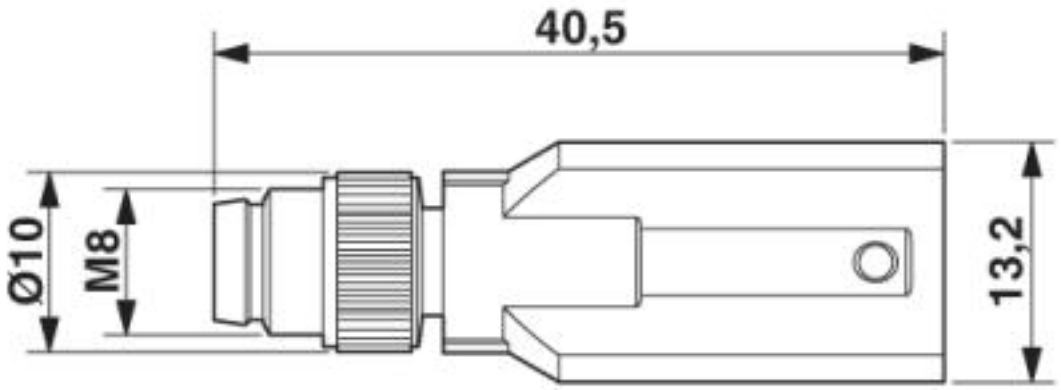

Plug M8 x 1, Y-distributor

Sensor/Actuator cable - SAC-3P-M8Y/2X0,3-PUR/M 8FR - 1458703

Dimensioned drawing

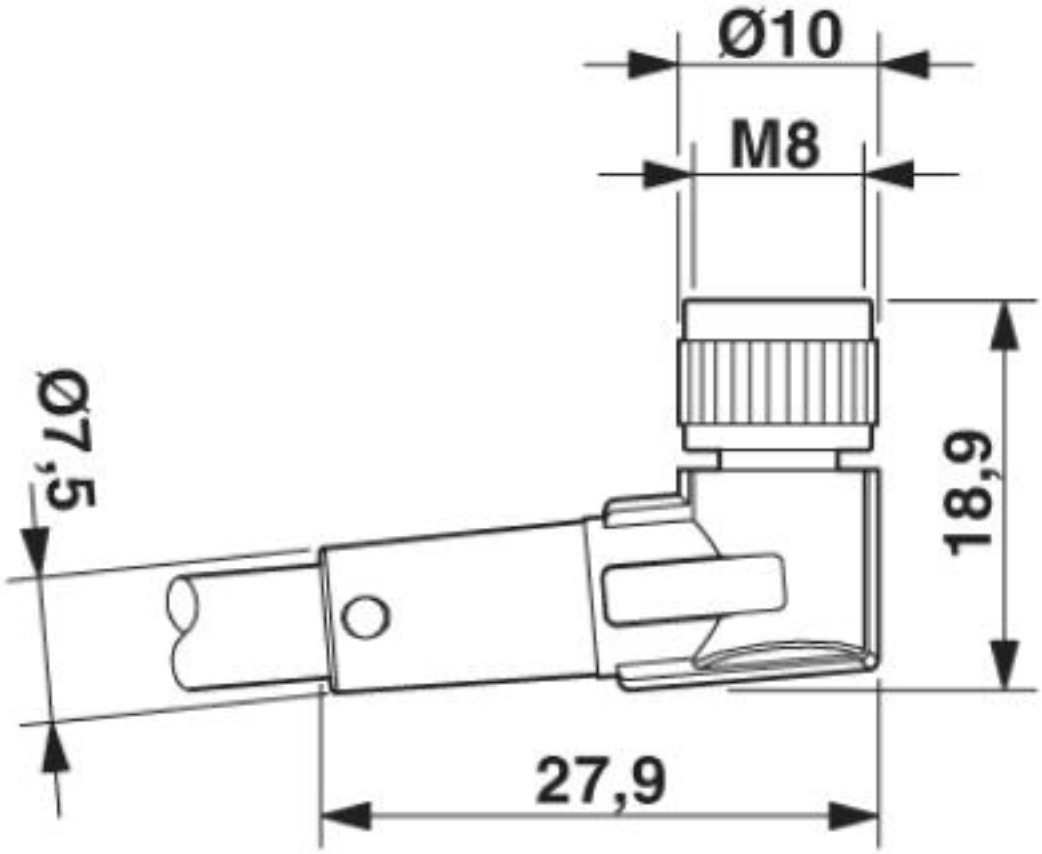

Socket M8 x 1, angled

Sensor/Actuator cable - SAC-3P-M8Y/2X0,3-PUR/M 8FR - 1458703

Circuit diagram

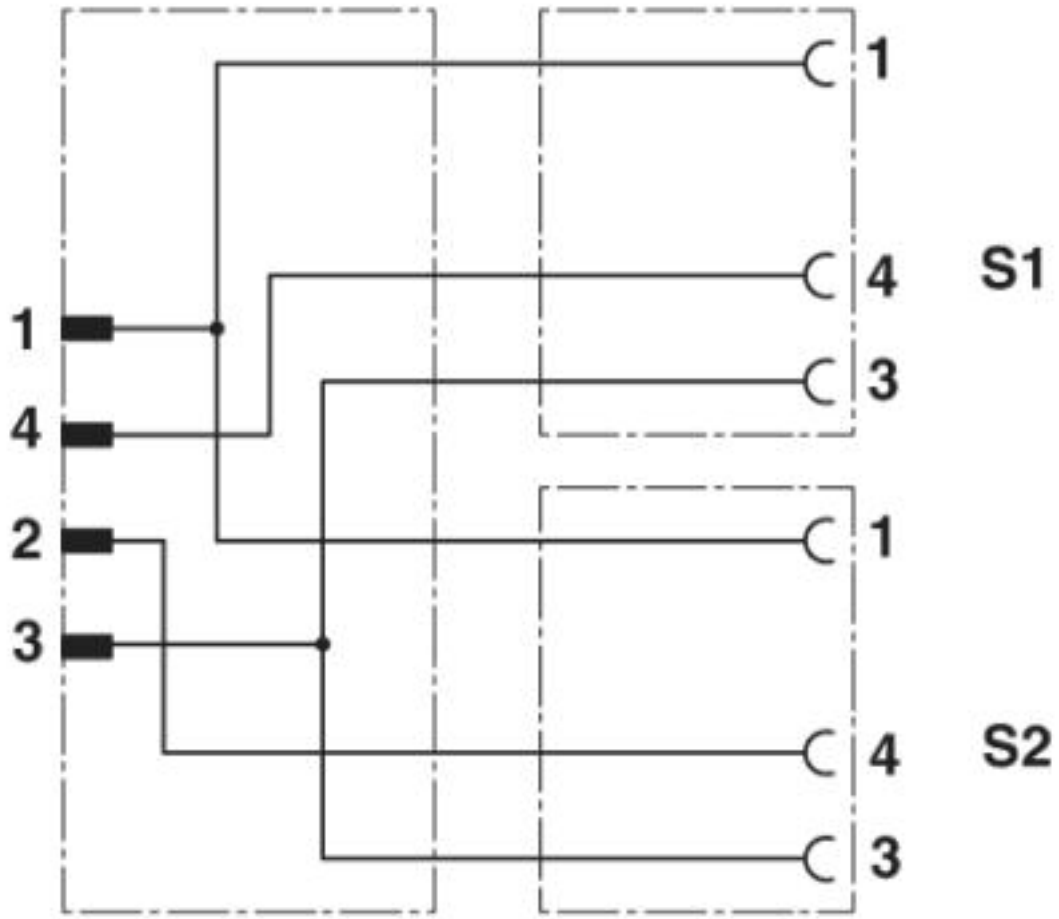

Contact assignment of the M8 plugs and the M12 sockets

Sensor/Actuator cable - SAC-3P-M8Y/2X0,3-PUR/M 8FR - 1458703

Schematic diagram

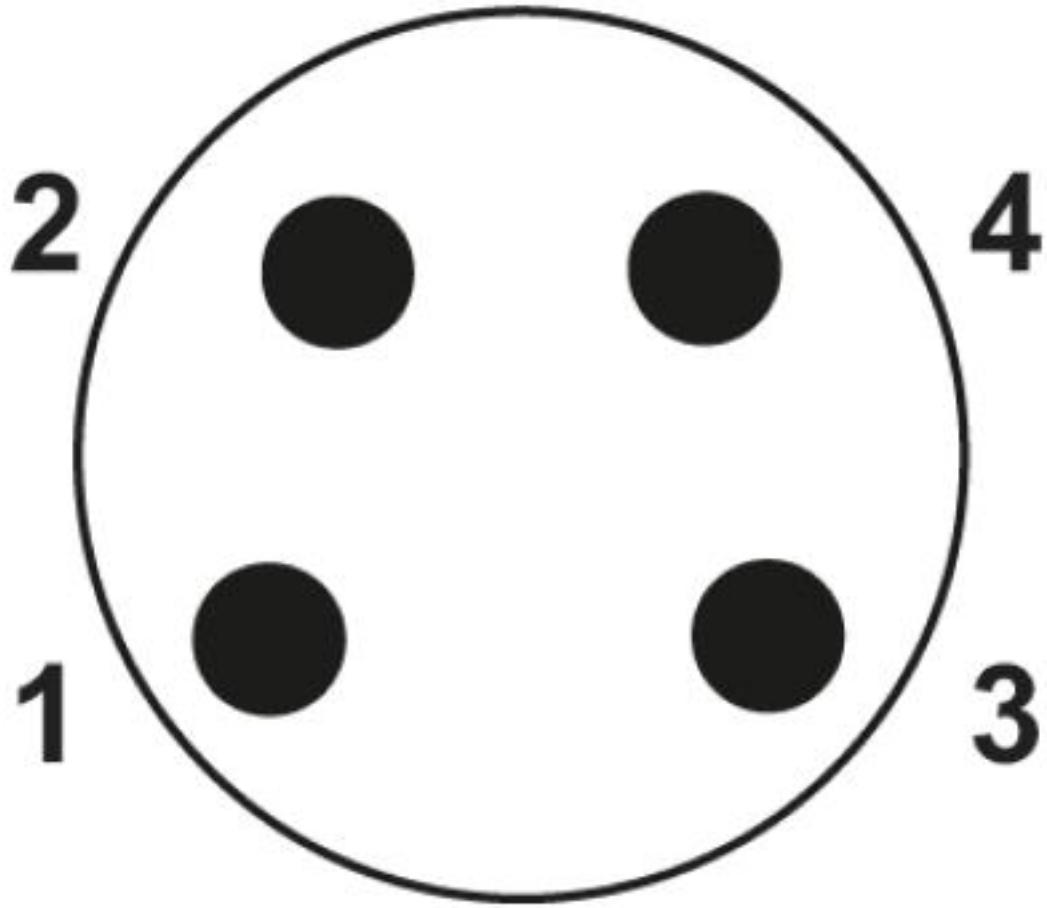

Pin assignment M8 plug, 4-pos., view male side

Sensor/Actuator cable - SAC-3P-M8Y/2X0,3-PUR/M 8FR - 1458703

Schematic diagram

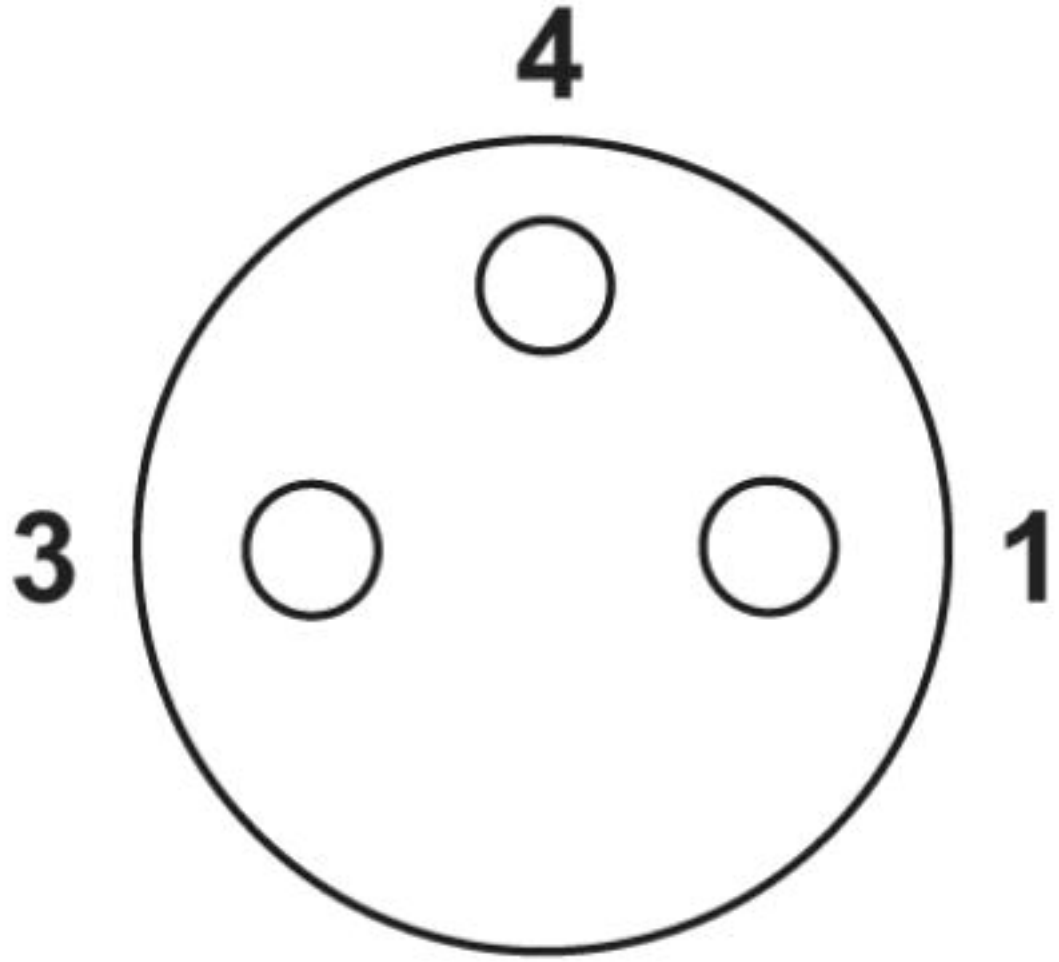

Pin assignment M8 socket, 3-pos., view female side

Schematic diagram

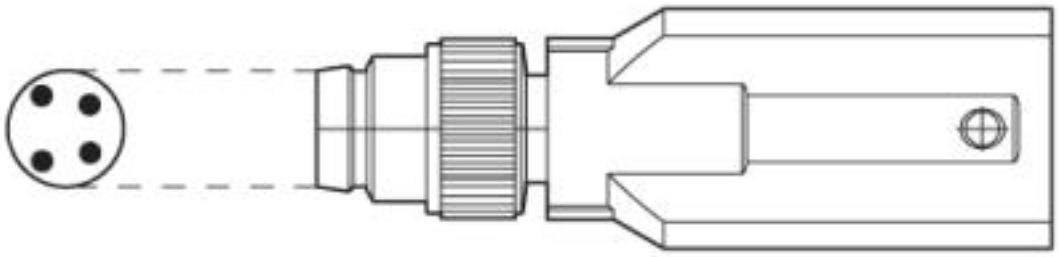

Alignment of the connector pin assignment

Sensor/Actuator cable - SAC-3P-M8Y/2X0,3-PUR/M 8FR - 1458703

Schematic diagram

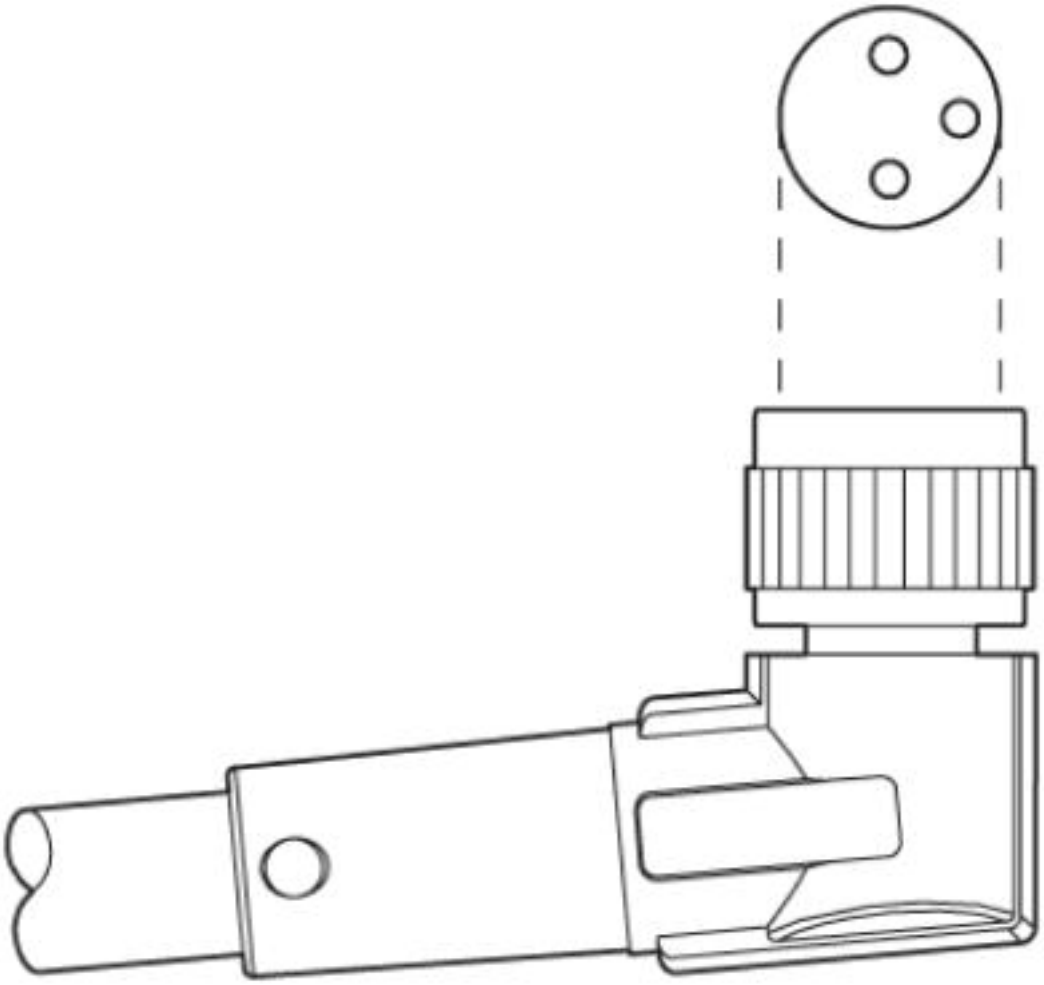

Alignment of the connector pin assignment

Sensor/Actuator cable - SAC-3P-M8Y/2X0,3-PUR/M 8FR - 1458703

Cable cross section

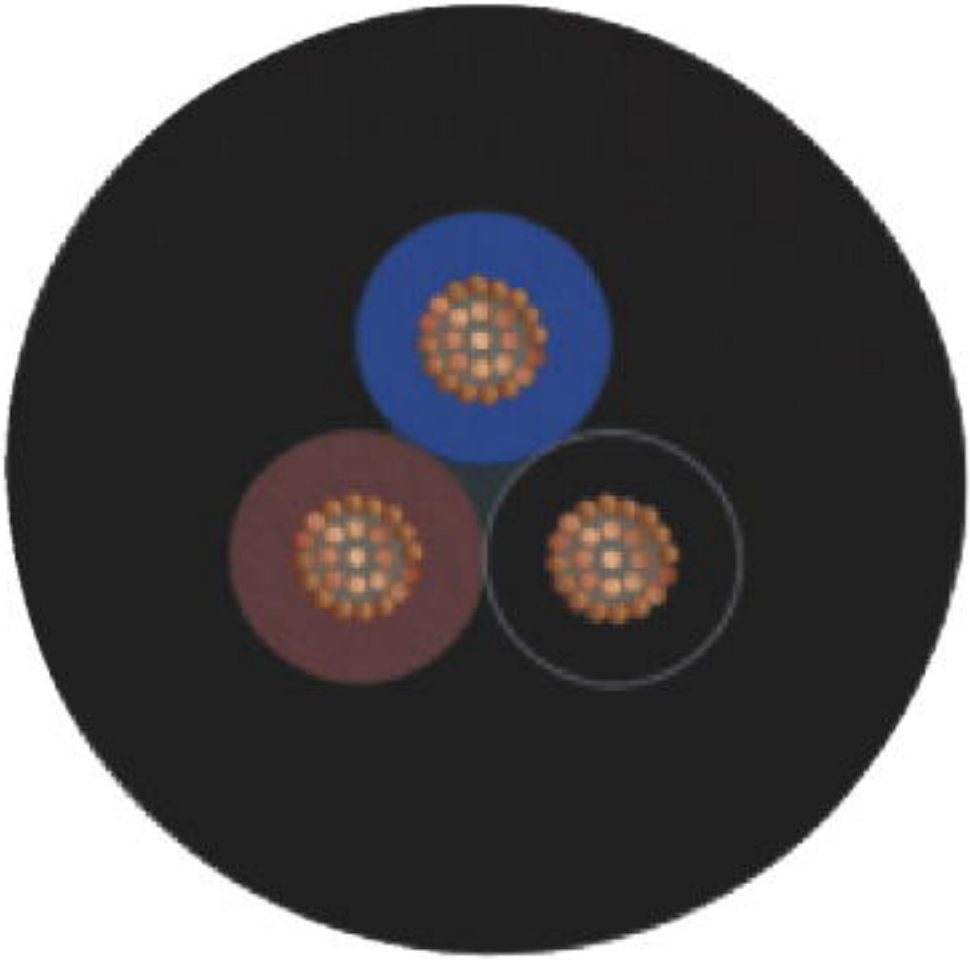

PUR halogen-free black [PUR]

© Phoenix Contact 2013 - all rights reserved
http://www.phoenixcontact.com