Flush-type connector - SACC-DSI-M8FS-5CON-M10-L180 DN - 1424241

Please be informed that the data shown in this PDF Document is generated from our Online Catalog. Please find the complete data in the user's documentation. Our General Terms of Use for Downloads are valid (http://download.phoenixcontact.com)



Sensor/actuator flush-type connector, socket, 5-pos., DeviceNet, M8, rear/screw mounting with M10 fastening thread, with straight solder connection

Key commercial data

package_quantity	20
GTIN	4046356712538

Technical data

Ambient conditions

Ambient temperature (operation)	-25 °C ... 85 °C
Degree of protection	IP67

General

Rated current at 40°C	3 A
Rated voltage	30 V
Number of positions	5
Contact resistance	≤ 3 mΩ
Insulation resistance	≥ 100 MΩ
Coding	B - inverse
Standards/regulations	M8 connector IEC 61076-2-104
Status display	No
Surge voltage category	II
Pollution degree	3
Connection method	Solder pins
Mounting type	Rear mounting M10 With flat nut

Material

Inflammability class according to UL 94	HB
Contact material	Cu alloy
Contact surface material	Au
Contact carrier material	PA 66
Material, knurls	Zinc die-cast, nickel-plated

Flush-type connector - SACC-DSI-M8FS-5CON-M10-L180 DN - 1424241

classifications

eCl@ss

eCl@ss 4.0	27140815
eCl@ss 4.1	27140815
eCl@ss 5.0	27143423
eCl@ss 5.1	27143423
eCl@ss 6.0	27143423
eCl@ss 7.0	27449001
eCl@ss 8.0	27449001

ETIM

ETIM 3.0	EC002061
ETIM 4.0	EC002635
ETIM 5.0	EC002635

UNSPSC

UNSPSC 6.01	31251501
UNSPSC 7.0901	31251501
UNSPSC 11	31251501
UNSPSC 12.01	31251501
UNSPSC 13.2	31251501

Drawings

Flush-type connector - SACC-DSI-M8FS-5CON-M10-L180 DN - 1424241

Drilling diagram

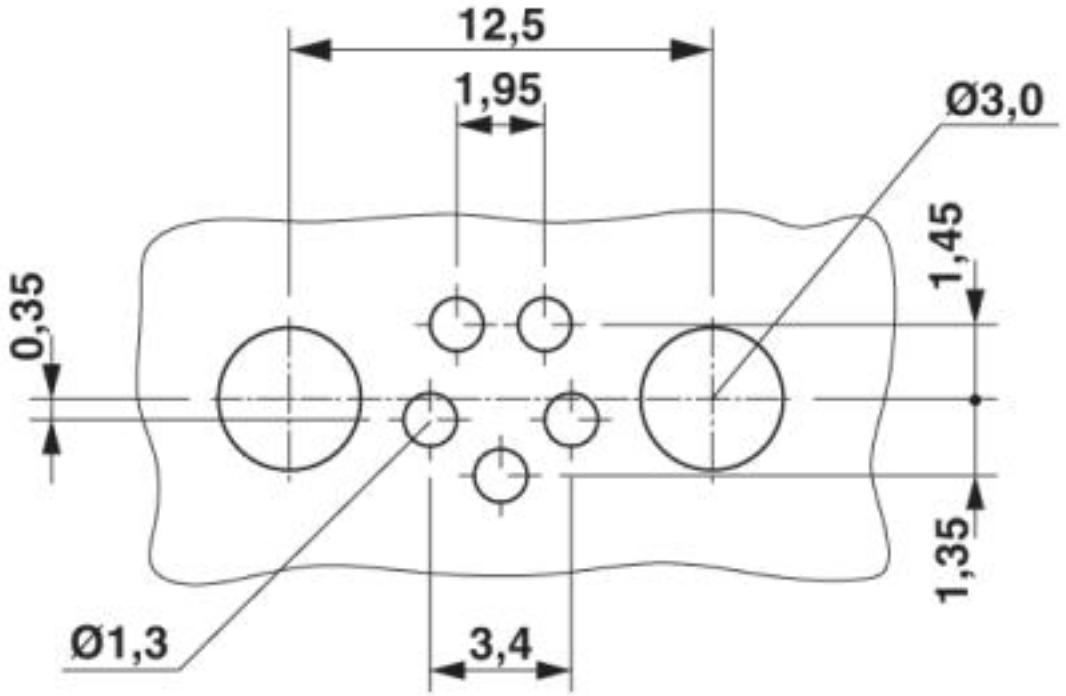

Drilling diagram

Flush-type connector - SACC-DSI-M8FS-5CON-M10-L180 DN - 1424241

Dimensioned drawing

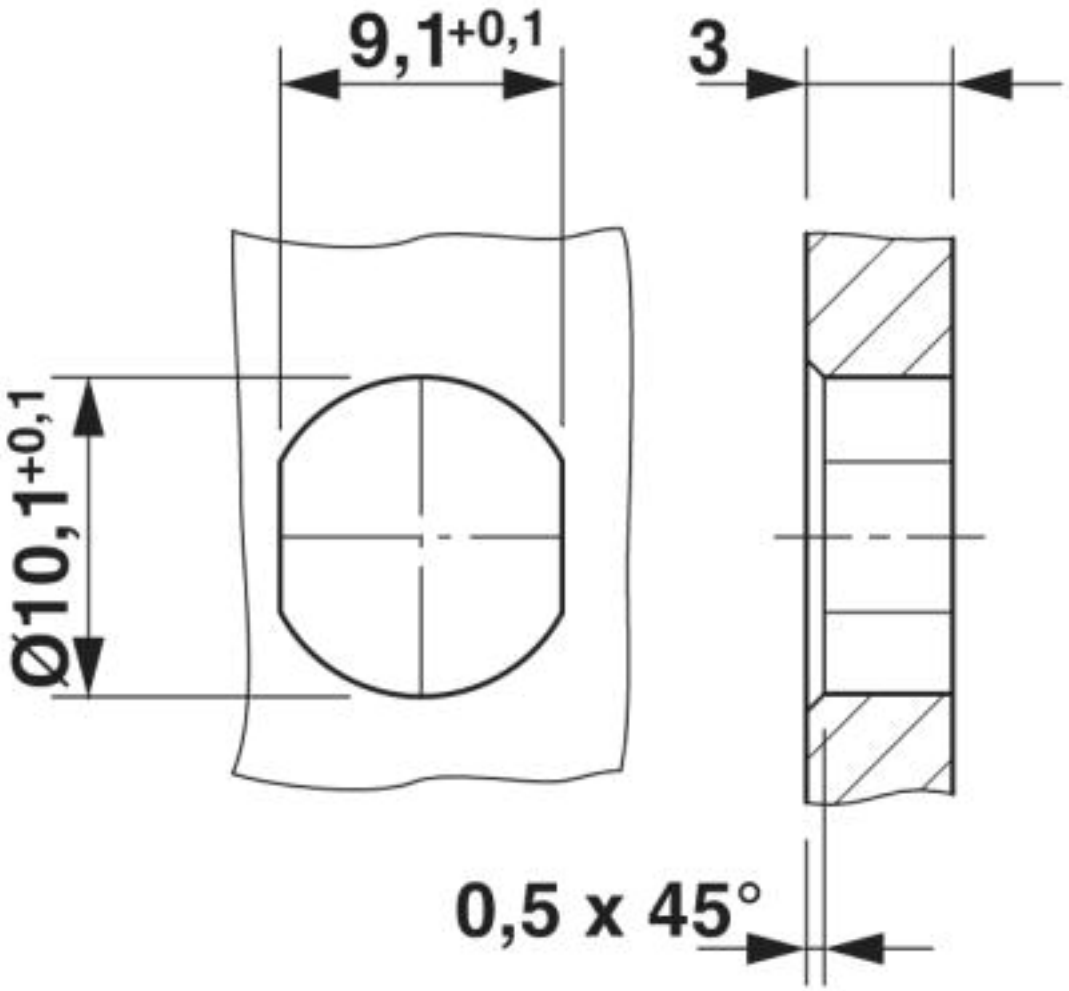

Housing cutout for M8 flush-type connector, socket, one-section

Flush-type connector - SACC-DSI-M8FS-5CON-M10-L180 DN - 1424241

Schematic diagram

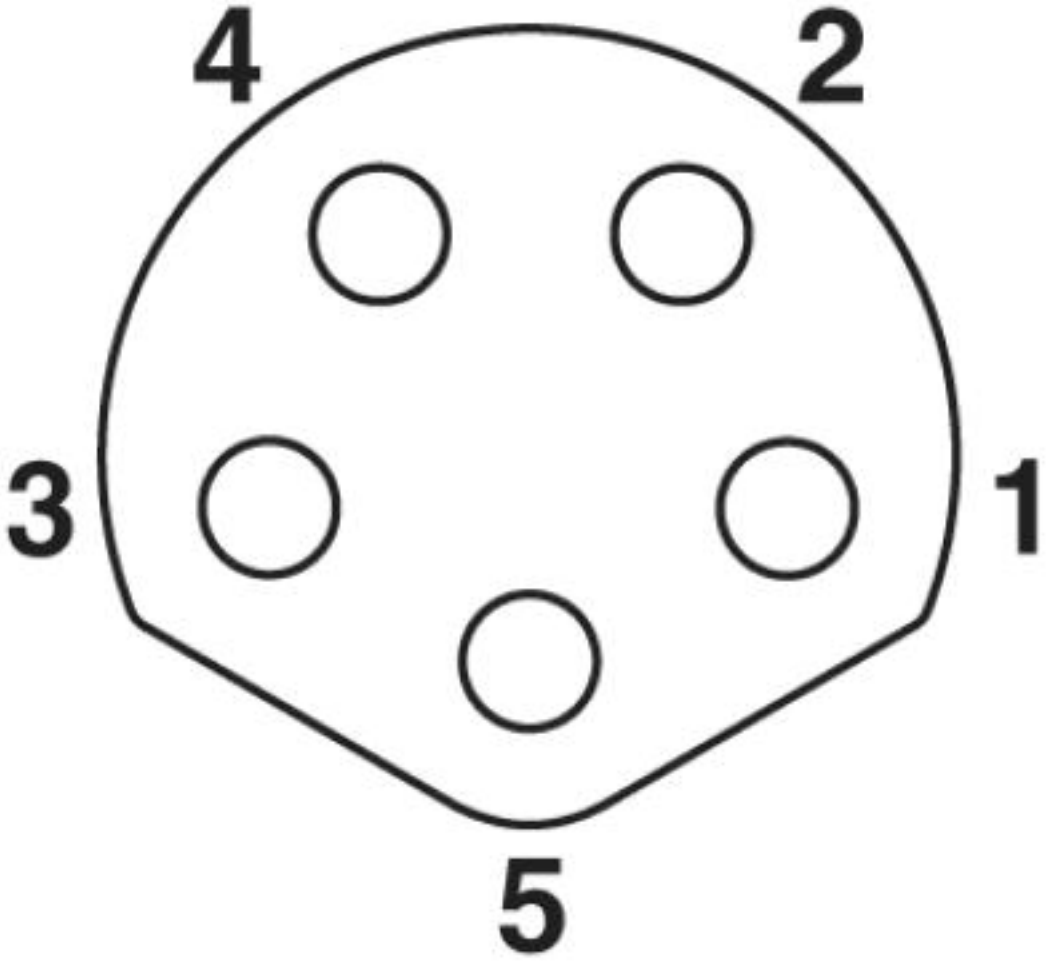

connector pin assignment of M8 socket, 4-pos., view of pin side

© Phoenix Contact 2013 - all rights reserved
http://www.phoenixcontact.com