Sensor/Actuator cable - SAC-3P-M12Y/2X5,0-PUR - 1669754

Please be informed that the data shown in this PDF Document is generated from our Online Catalog. Please find the complete data in the user's documentation. Our General Terms of Use for Downloads are valid (http://download.phoenixcontact.com)



Sensor/Actuator cable, 3-position, PUR halogen-free, Black-gray RAL 7021, Plug straight M12, A-coded, on Free cable end and Free cable end, Cable length: 5 m

Key commercial data

package_quantity	1
GTIN	4017918134655

Technical data

Dimensions

Length of cable	5 m
Stripping length of the free conductor end	50 mm

Ambient conditions

Ambient temperature (operation)	-25 °C ... 90 °C (Plug / socket)
Degree of protection	IP65
Degree of protection	IP67
Degree of protection	IP68

General

Rated current at 40°C	4 A
Rated voltage	250 V
Number of positions	3
Contact resistance	≤ 5 mΩ
Insulation resistance	≥ 100 MΩ
Coding	A - standard
Standards/regulations	M12 connector IEC 61076-2-101
Status display	No
Surge voltage category	II
Pollution degree	3
Insertion/withdrawal cycles	≥ 100
Torque	0.4 Nm (M12 connector)

Material

Inflammability class according to UL 94	HB
Contact material	CuSn

Sensor/Actuator cable - SAC-3P-M12Y/2X5,0-PUR - 1669754

Technical data

Material

Contact surface material	Ni/Au
Contact carrier material	TPU GF
Material of grip body	TPU, hardly inflammable, self-extinguishing
Material, knurls	Zinc die-cast, nickel-plated

Cable

Cable type	PUR halogen-free black
Cable type (abbreviation)	PUR
Cable abbreviation	Li9Y11Y
UL AWM style	20549
Conductor cross section	3x 0.34 mm² (signal line)
AWG signal line	22
Conductor structure signal line	42x 0.10 mm
Core diameter including insulation	1.27 mm ±0.02 mm (signal line)
Thickness, insulation	≥ 0.21 mm (Core insulation)
Thickness, insulation	approx. 0.8 mm (Outer cable sheath)
Wire colors	brown, blue, black
Overall twist	3 wires, twisted
External sheath, color	Black-gray RAL 7021
External cable diameter D	4.4 mm ±0.15 mm
Smallest bending radius, fixed installation	22 mm
Smallest bending radius, movable installation	44 mm
Number of bending cycles	4000000
Bending radius	44 mm
Traversing path	10 m
Traversing rate	3 m/s
Acceleration	10 m/s²
Cable weight	26 kg/km
Outer sheath, material	PUR
Material conductor insulation	PP
Conductor material	Bare Cu litz wires
Insulation resistance	≥ 100 GΩ*km (at 20 °C)
Conductor resistance	max. 58 Ω/km (at 20 °C)
Nominal voltage, cable	≤ 300 V
Test voltage, cable	≥ 3000 V
Special properties	Flexible cable conduit capable
Special properties	Silicone-free
Special properties	Free of substances which would hinder coating with paint or varnish
Flame resistance	in accordance with DIN UL-Style 20549
Halogen-free	in accordance with DIN VDE 0472 part 815
Resistance to oil	in accordance with DIN EN 60811-2-1

Sensor/Actuator cable - SAC-3P-M12Y/2X5,0-PUR - 1669754

Technical data

Cable

Other resistance	Highly resistant to acids, alkaline solutions and solvents
Other resistance	hydrolysis and microbe resistant
Other resistance	partly UV-resistant in accordance with DIN EN ISO 4892-2-A
Ambient temperature (operation)	-40 °C ... 80 °C (cable, fixed installation)
Ambient temperature (operation)	-25 °C ... 80 °C (cable, flexible installation)

classifications

eCl@ss

eCl@ss 4.0	27060306
eCl@ss 4.1	27060306
eCl@ss 5.0	27061801
eCl@ss 5.1	27061801
eCl@ss 6.0	27061801
eCl@ss 7.0	27061801
eCl@ss 8.0	27061801

ETIM

ETIM 2.0	EC000830
ETIM 3.0	EC001855
ETIM 4.0	EC001855
ETIM 5.0	EC001855

UNSPSC

UNSPSC 6.01	31251501
UNSPSC 7.0901	31251501
UNSPSC 11	31251501
UNSPSC 12.01	31251501
UNSPSC 13.2	31251501

approvals

UL Listed / cUL Listed / GOST / cULus Listed /

Approval details

UL Listed

Nominal voltage UN	300 V
Nominal current IN	4 A
mm²/AWG/kcmil	

Sensor/Actuator cable - SAC-3P-M12Y/2X5,0-PUR - 1669754

approvals

cUL Listed

Nominal voltage UN	300 V
Nominal current IN	4 A
mm²/AWG/kcmil	

GOST

cULus Listed

accessories

Protective cap

PROT-M12 FS-PA-CHAIN - 1430873



Safety locking

SAC-M12-EXCLIP-M - 1558988



Conductor marking

Sensor/Actuator cable - SAC-3P-M12Y/2X5,0-PUR - 1669754

accessories

PABA WH/15 - 1013151



PABA YE/15 - 1013698



PABA RD/15 - 1013944



Marker carrier cable

PATG 2/15 - 1013038



PATG 3/15 - 1013041



Sensor/Actuator cable - SAC-3P-M12Y/2X5,0-PUR - 1669754

accessories

PATG 4/15 - 1013054



Marker pen

B-STIFT - 1051993



Cutting tools

CUTFOX-S VDE - 1212207



Stripping tool

WIREFOX SAC - 1212623



WIREFOX 10 - 1212150



Sensor/Actuator cable - SAC-3P-M12Y/2X5,0-PUR - 1669754

accessories

Torque tool

TSD 04 SAC - 1208429



TSD-M 1,2NM - 1212224



Screwdriver tools

TSD-M SAC-BIT ADAPTER - 1212600



SAC BIT M12-D15 - 1208432



accessories

WIREFOX SAC-1 - 1212757

Sensor/Actuator cable - SAC-3P-M12Y/2X5,0-PUR - 1669754

Drawings

Dimensioned drawing

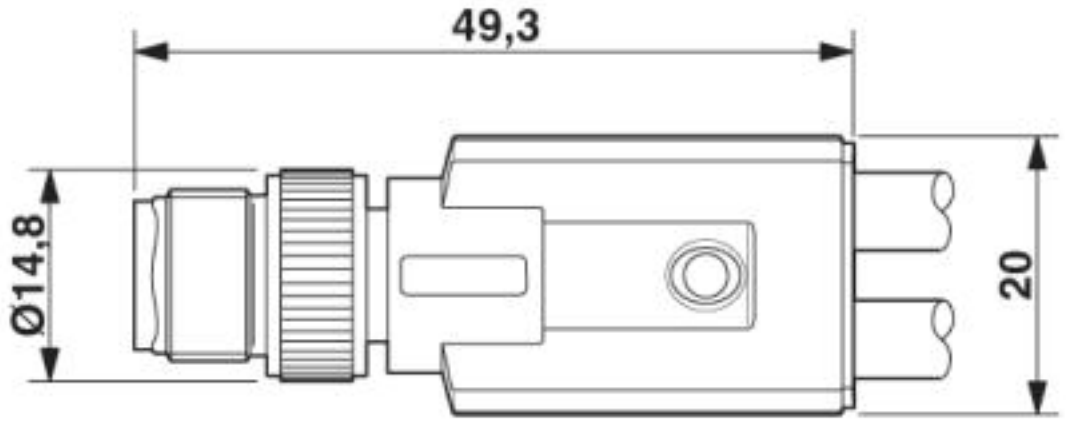

Plug M12 x 1, Y distributor

Circuit diagram

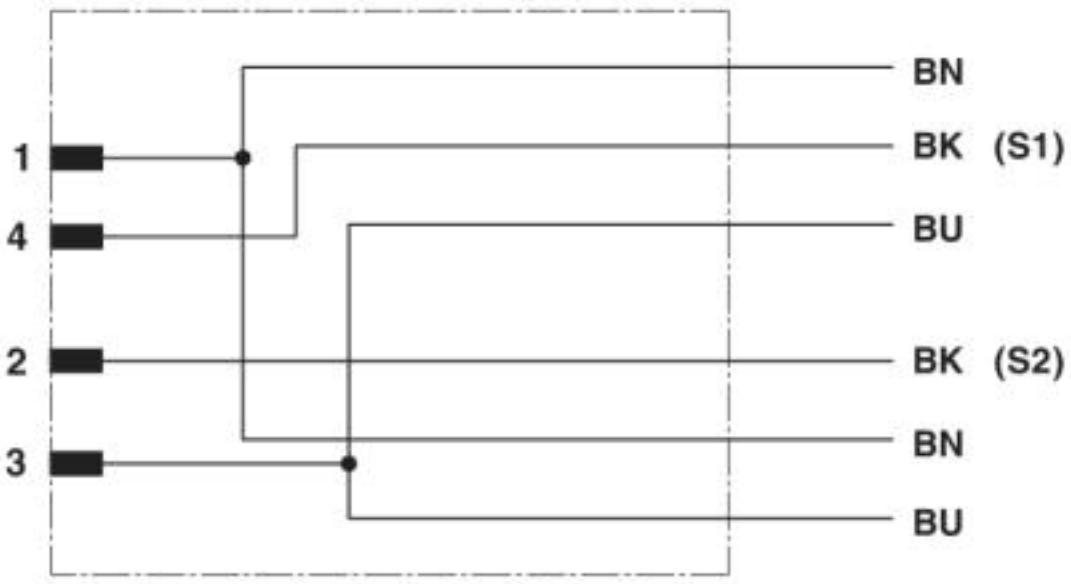

Contact assignment of the M12 Y connector

Sensor/Actuator cable - SAC-3P-M12Y/2X5,0-PUR - 1669754

Schematic diagram

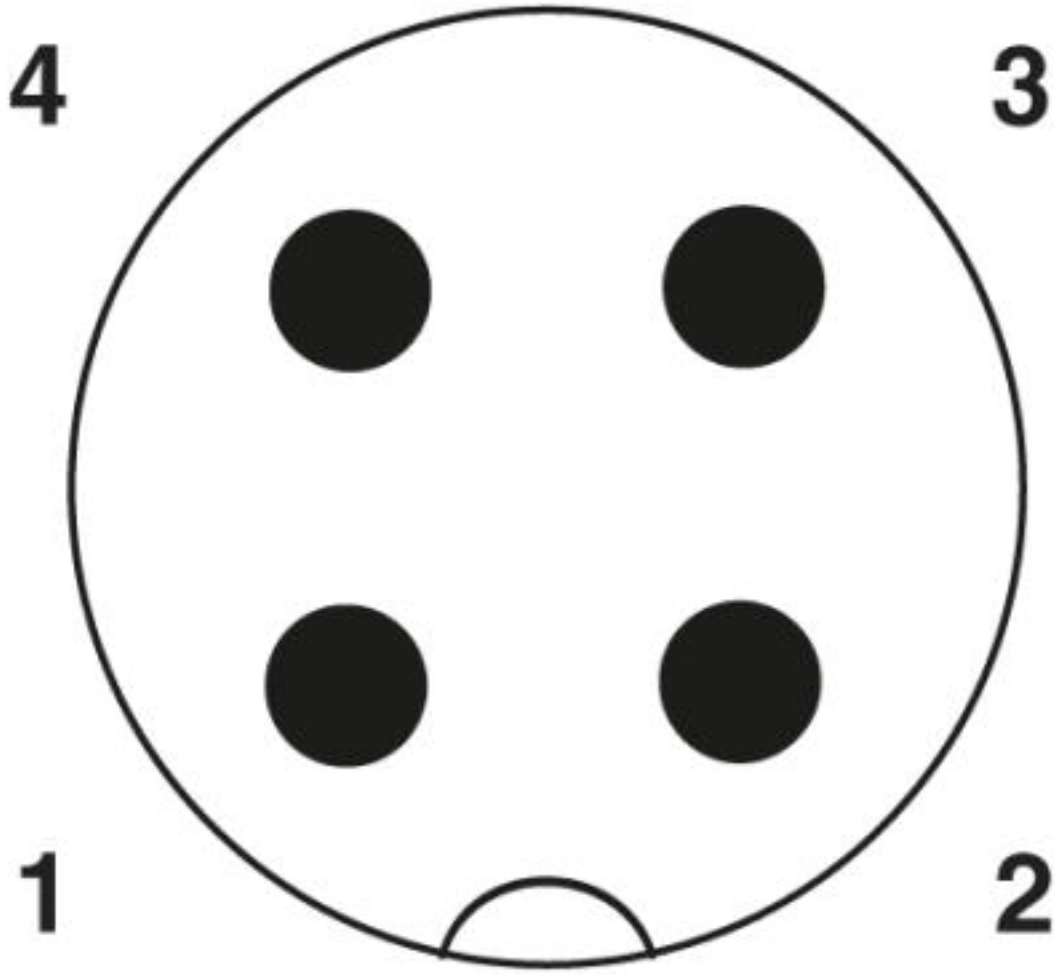

Pin assignment M12 Y plug, 4-pos., A-coded, view plug side

Sensor/Actuator cable - SAC-3P-M12Y/2X5,0-PUR - 1669754

Cable cross section

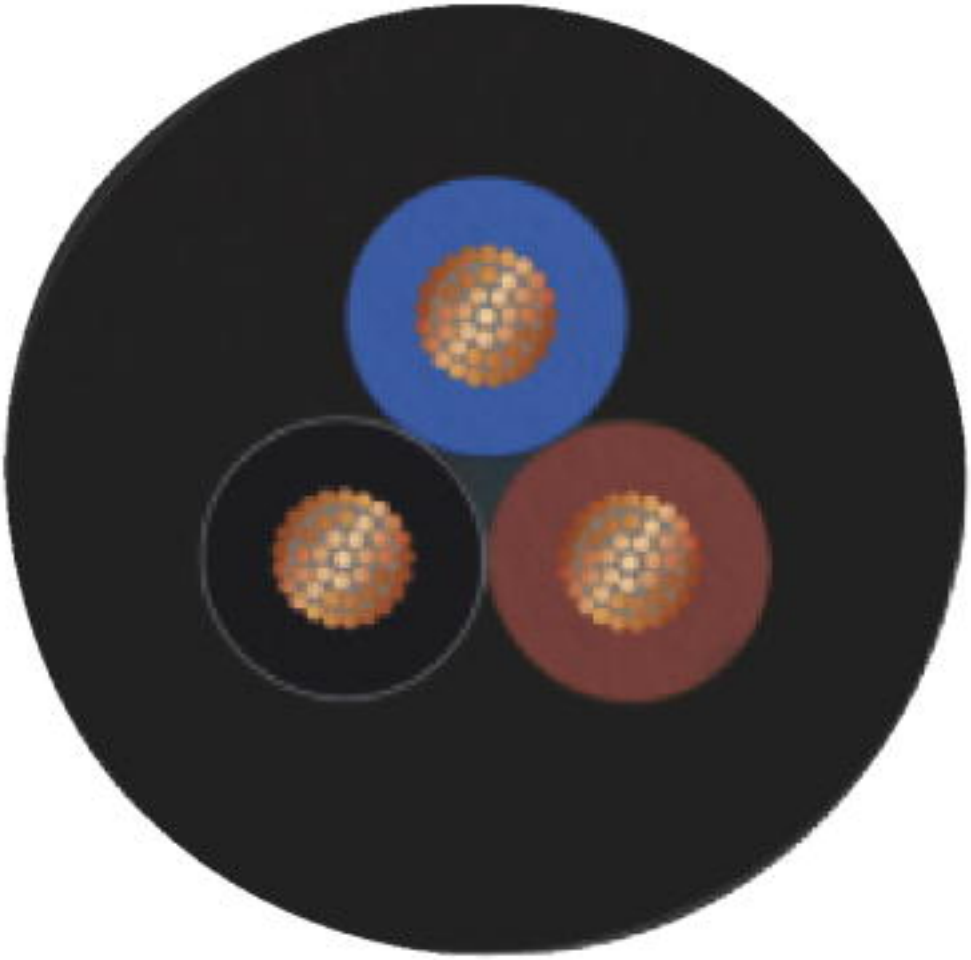

PUR halogen-free black [PUR]

© Phoenix Contact 2013 - all rights reserved
http://www.phoenixcontact.com