Sensor/Actuator cable - SAC-3P-MS/ 0,6-PUR/B-1L-Z SCO - 1435292

Please be informed that the data shown in this PDF Document is generated from our Online Catalog. Please find the complete data in the user's documentation. Our General Terms of Use for Downloads are valid (http://download.phoenixcontact.com)



Sensor/Actuator cable, 3-position, PUR halogen-free, Black-gray RAL 7021, Plug straight M12 SPEEDCON, A-coded, on Valve connector B (10 mm), with 1 LED, connected with Z diode, Cable length: 0.6 m

Product Features

- Easy and safe: 100% electrically tested plug-in components
- Robust valve connector with Zener diode as protective circuit
- Save time, thanks to installation with SPEEDCON rapid interlock system
- Convenient: increased machine availability thanks to quick and easy diagnostics
- Our standard: robust halogen-free PUR cable

Key commercial data

package_quantity	1
GTIN	4046356413619

Technical data

Dimensions

Length of cable	0.6 m

Ambient conditions

Ambient temperature (operation)	-25 °C ... 90 °C (Plug / socket)
Ambient temperature (operation)	-20 °C ... 85 °C (valve plug)
Degree of protection	IP65
Degree of protection	IP67

General

Rated current at 40°C	4 A
Rated voltage	24 V
Number of positions	3
Contact resistance	≤ 5 mΩ
Insulation resistance	≥ 100 MΩ
Coding	A - standard
Standards/regulations	M12 connector IEC 61076-2-101

Sensor/Actuator cable - SAC-3P-MS/ 0,6-PUR/B-1L-Z SCO - 1435292

Technical data

General

Standards/regulations	Valve connector EN 175301-803
Status display	1 LED
Protective circuit/component	Z diode
Surge voltage category	III
Pollution degree	3
Insertion/withdrawal cycles	≥ 100 (M12 connector)
Torque	0.4 Nm (M12 connector)
Torque	0.6 Nm (Valve connector)

Material

Inflammability class according to UL 94	HB
Contact material	CuSn
Contact surface material	Ni/Au
Contact carrier material	TPU GF
Material of grip body	TPU
Valve plug contact material	CuSn
Valve plug contact surface material	Sn
Valve plug contact insert material	PA 66
Material housing valve plug	TPU
Material, knurls	Zinc die-cast, nickel-plated
Sealing material	TPU (Seal molded)

Cable

Cable type	PUR halogen-free black
Cable type (abbreviation)	PUR
Cable abbreviation	Li9Y11Y-HF
UL AWM style	20549
Conductor cross section	3x 0.5 mm²
AWG signal line	20
Conductor structure signal line	28x 0.15 mm
Core diameter including insulation	1.5 mm ±0.05 mm (signal line)
Wire colors	black 1, black 2, green/yellow
Overall twist	3 wires, twisted
External sheath, color	Black-gray RAL 7021
External cable diameter D	4.5 mm ± 0.2 mm
Smallest bending radius, fixed installation	22.5 mm
Number of bending cycles	15000000
Bending radius	50 mm
Traversing path	0.9 m
Traversing rate	5 m/s
Acceleration	30 m/s²

Sensor/Actuator cable - SAC-3P-MS/ 0,6-PUR/B-1L-Z SCO - 1435292

Technical data

Cable

Outer sheath, material	PUR
Material conductor insulation	PP
Conductor material	Bare Cu litz wires
Insulation resistance	min. 20 MΩ*km
Conductor resistance	39 Ω/km (at 20 °C)
Nominal voltage, cable	≤ 300 V
Test voltage, cable	≥ 1200 V
Flame resistance	According to DIN VDE 0482
Flame resistance	According to DIN EN 50265-2-1
Halogen-free	in accordance with DIN VDE 0472 part 815
Other resistance	Largely oil-resistant
Other resistance	partly UV-resistant in accordance with DIN EN ISO 4892-2-A
Ambient temperature (operation)	-40 °C ... 80 °C (cable, fixed installation)
Ambient temperature (operation)	-20 °C ... 80 °C (cable, flexible installation)

classifications

eCl@ss

eCl@ss 4.0	27060306
eCl@ss 4.1	27060306
eCl@ss 5.0	27061801
eCl@ss 5.1	27061801
eCl@ss 6.0	27061801
eCl@ss 7.0	27061801
eCl@ss 8.0	27061801

ETIM

ETIM 3.0	EC001855
ETIM 4.0	EC001855
ETIM 5.0	EC001855

UNSPSC

UNSPSC 6.01	31251501
UNSPSC 7.0901	31251501
UNSPSC 11	31251501
UNSPSC 12.01	31251501
UNSPSC 13.2	31251501

approvals

GOST /

Sensor/Actuator cable - SAC-3P-MS/ 0,6-PUR/B-1L-Z SCO - 1435292

approvals

Approval details

GOST

accessories

Mounting material

SAC-V-SCREW-M3-29 KNURL - 1403779



Screwdriver tools

SF-BIT-PH 1-70 - 1212582



TSD-M SAC-BIT ADAPTER - 1212600



SAC BIT M12-D15 - 1208432



Sensor/Actuator cable - SAC-3P-MS/ 0,6-PUR/B-1L-Z SCO - 1435292

accessories

Protective cap

PROT-M12 FS-PA-CHAIN - 1430873



Safety locking

SAC-M12-EXCLIP-M - 1558988



Conductor marking

PABA WH/15 - 1013151



PABA YE/15 - 1013698



PABA RD/15 - 1013944



Sensor/Actuator cable - SAC-3P-MS/ 0,6-PUR/B-1L-Z SCO - 1435292

accessories

Marker carrier cable

PATO 2/15 - 1013122



PATO 3/15 - 1013135



PATO 4/15 - 1013148



Marker pen

B-STIFT - 1051993



Torque tool

Sensor/Actuator cable - SAC-3P-MS/ 0,6-PUR/B-1L-Z SCO - 1435292

accessories

TSD 04 SAC - 1208429



TSD-M 1,2NM - 1212224



Drawings

Dimensioned drawing

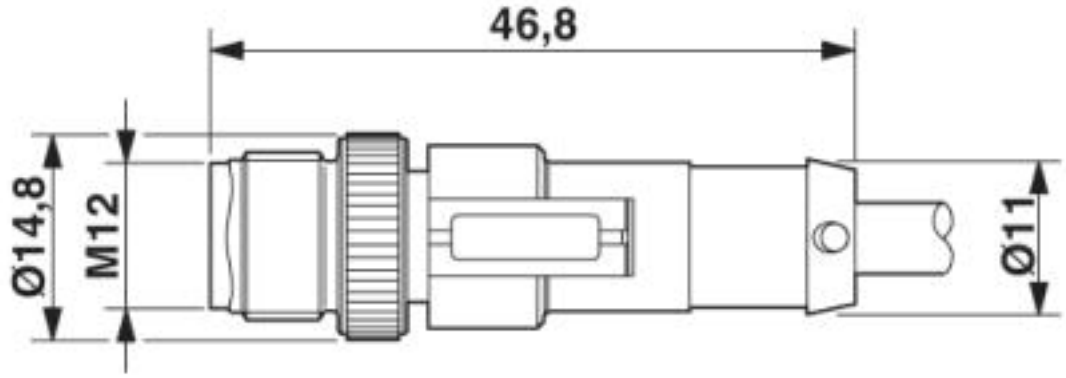

M12 x 1 plug, straight

Sensor/Actuator cable - SAC-3P-MS/ 0,6-PUR/B-1L-Z SCO - 1435292

Dimensioned drawing

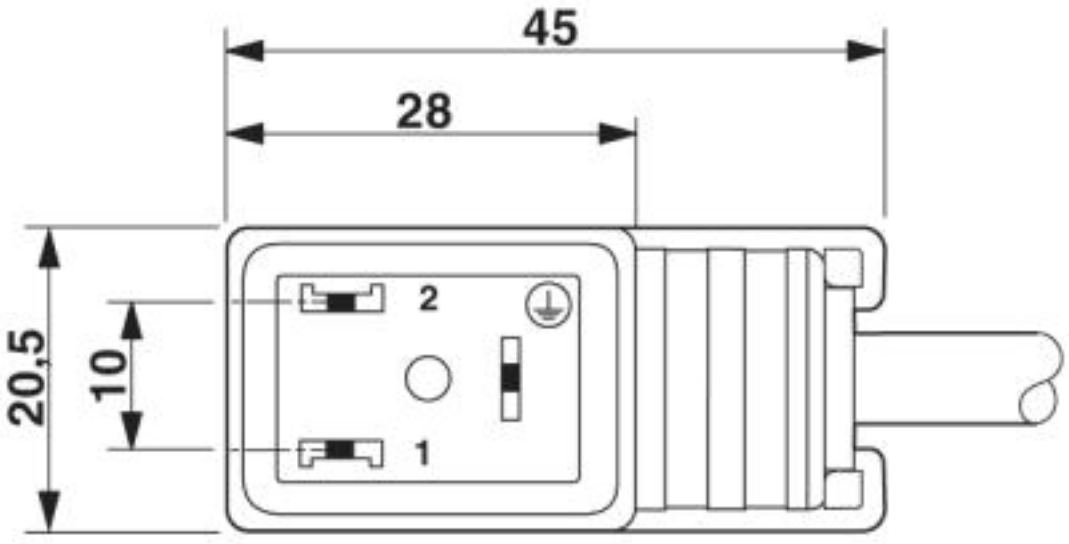

Valve connector, type B

Dimensioned drawing

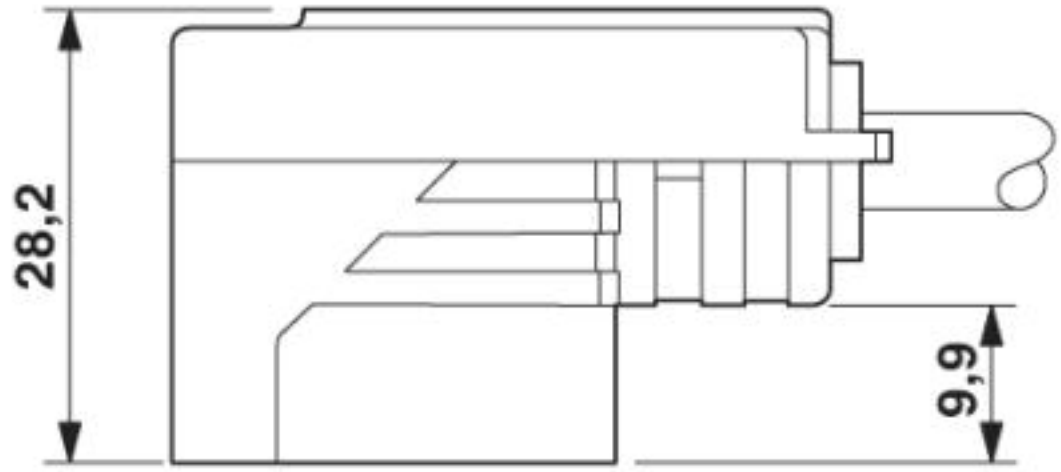

Valve connector, type B, side view

Sensor/Actuator cable - SAC-3P-MS/ 0,6-PUR/B-1L-Z SCO - 1435292

Circuit diagram

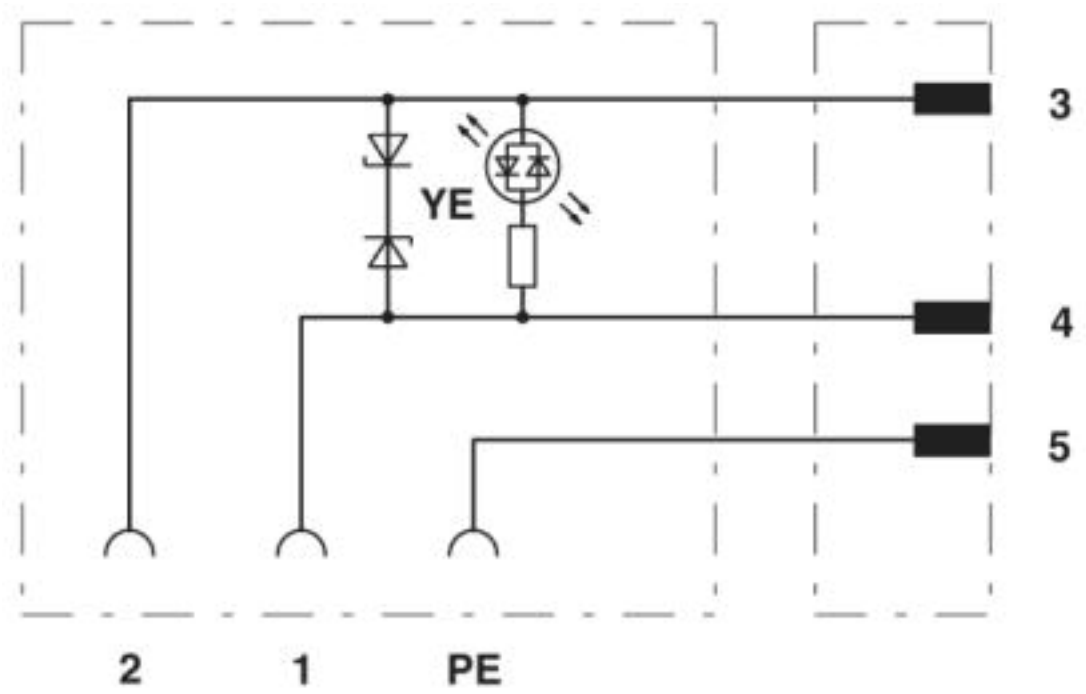

Contact assignment of M12 plug and valve connector

Sensor/Actuator cable - SAC-3P-MS/ 0,6-PUR/B-1L-Z SCO - 1435292

Schematic diagram

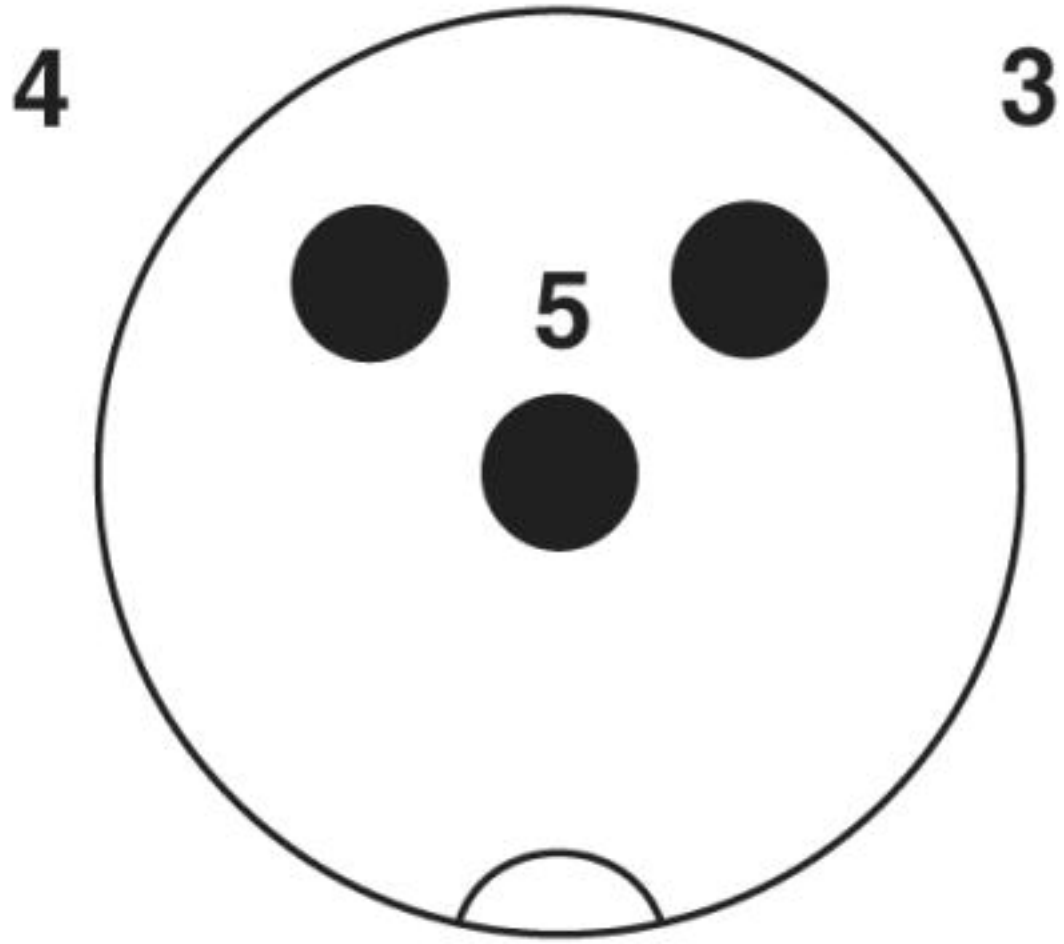

Pin assignment M12 plug, 3-pos., valve connector

Sensor/Actuator cable - SAC-3P-MS/ 0,6-PUR/B-1L-Z SCO - 1435292

Cable cross section

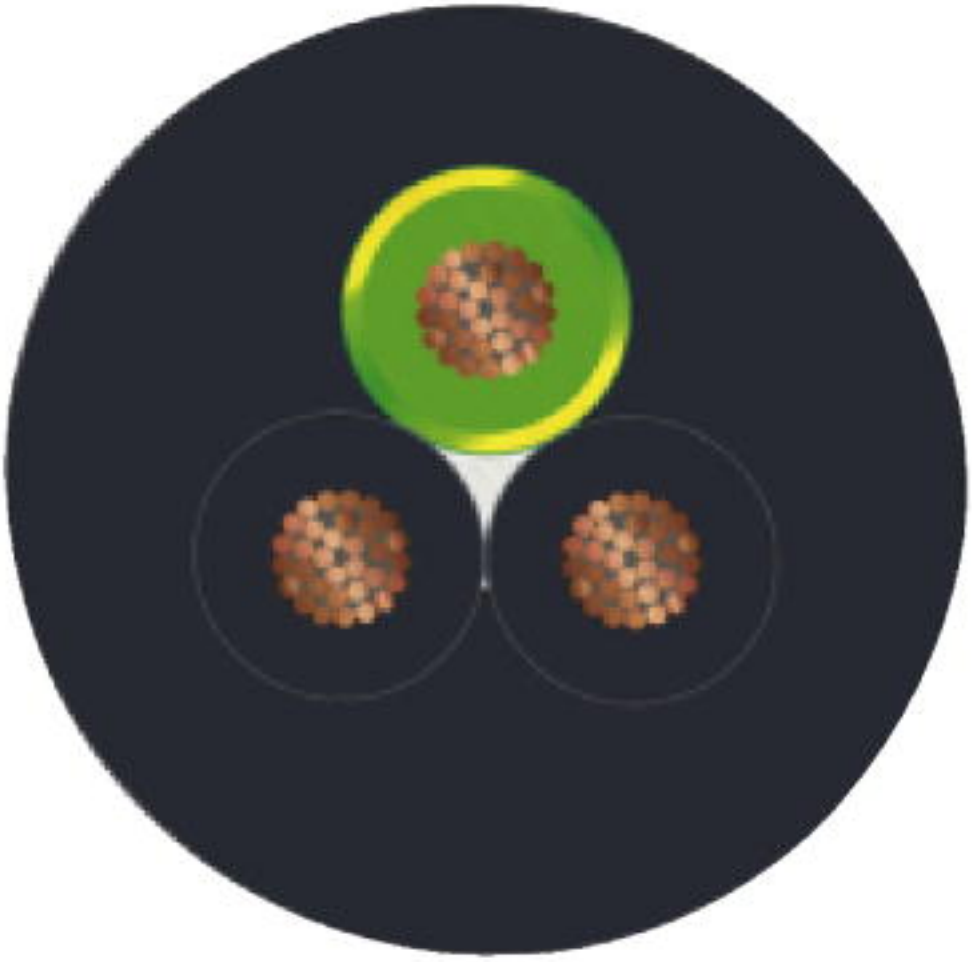

PUR halogen-free black [PUR]

© Phoenix Contact 2013 - all rights reserved
http://www.phoenixcontact.com