# Bus system flat-type plug - SACCBP-M12FS-8CON-M16/2,0-940 - 1553381

Please be informed that the data shown in this PDF Document is generated from our Online Catalog. Please find the complete data in the user's documentation. Our General Terms of Use for Downloads are valid (http://download.phoenixcontact.com)



Bus system flush-type socket, ETHERNET, 8-pos., M12, shielded, rear/screw mounting with M16 thread, with 2 m bus cable, 4 x 2 x 0.26 mm²

**Ethernet**

## Key commercial data

| | |
|---|---|
| **package_quantity** | 1 |
| **GTIN** | 4046356162364 |

## Technical data

### Dimensions

| | |
|---|---|
| **Length of cable** | 2 m |

### Ambient conditions

| | |
|---|---|
| **Ambient temperature (operation)** | -25 °C ... 90 °C (Plug / socket) |
| **Degree of protection** | IP67 |

### General

| | |
|---|---|
| **Rated current at 40°C** | 2 A |
| **Rated voltage** | 30 V |
| **Number of positions** | 8 |
| **Contact resistance** | ≤ 3 mΩ |
| **Insulation resistance** | ≥ 100 MΩ |
| **Coding** | A - standard |
| **Status display** | No |
| **Surge voltage category** | II |
| **Pollution degree** | 3 |

### Material

| | |
|---|---|
| **Inflammability class according to UL 94** | V0 |
| **Contact material** | CuZn |
| **Contact surface material** | Ni/Au |
| **Contact carrier material** | PA 66 |
| **Material, knurls** | Nickel-plated brass |
| **Sealing material** | NBR |

# Bus system flat-type plug - SACCBP-M12FS-8CON-M16/2,0-940 - 1553381

## Technical data

### Cable

| | |
|---|---|
| **Cable type** | Ethernet |
| **Cable type (abbreviation)** | 94F |
| **Cable structure** | 4x2xAWG26/7; S/FTP |
| **Conductor cross section** | 4x 2x 0.14 mm² |
| **AWG signal line** | 26 |
| **Conductor structure signal line** | 7x 0.16 mm |
| **Core diameter including insulation** | 1.04 mm |
| **Thickness, insulation** | 0.28 mm (signal line) |
| **Thickness, insulation** | 0.65 mm (Outer cable sheath) |
| **Wire colors** | white/blue-blue, white/orange-orange, white/green-green, white/brown-brown |
| **Twisted pairs** | 2 cores to the pair |
| **Type of pair shielding** | Aluminum-lined polyester foil |
| **Overall twist** | 4 pairs |
| **Shielding** | Tinned copper braided shield |
| **Optical shield covering** | 70 % |
| **External sheath, color** | water blue RAL 5021 |
| **External cable diameter D** | 6.4 mm ± 0.2 mm |
| **Smallest bending radius, fixed installation** | 25.6 mm |
| **Smallest bending radius, movable installation** | 51.2 mm |
| **Cable weight** | 43 kg/km |
| **Outer sheath, material** | PUR |
| **Material conductor insulation** | PE |
| **Conductor material** | Bare Cu litz wires |
| **Insulation resistance** | ≥ 500 MΩ*km (at 20 °C) |
| **Conductor resistance** | ≤ 290 Ω/km (at 20 °C) |
| **Transmission characteristics (category)** | $CAT6_A$ |
| **Wave impedance** | 100 Ω ± 5 Ω (At 100 MHz) |
| **Signal runtime** | 5.3 ns/m |
| **Shield attenuation** | ≥ 80 dB (at 30 ... 100 MHz) |
| **Nominal voltage, cable** | ≤ 100 V (at 20 °C) |
| **Test voltage Core/Core** | 700 V (50 Hz, 1 min.) |
| **Test voltage Core/Shield** | 700 V (50 Hz, 1 min.) |
| **Flame resistance** | IEC 60332-1-2 |
| **Halogen-free** | According to IEC 60754-1 |
| **Resistance to oil** | in accordance with DIN EN 60811-2-1 |
| **Ambient temperature (operation)** | -40 °C ... 70 °C (cable, fixed installation) |
| **Ambient temperature (operation)** | -10 °C ... 50 °C (cable, flexible installation) |

# Bus system flat-type plug - SACCBP-M12FS-8CON-M16/2,0-940 - 1553381

## classifications

### eCl@ss

| | |
|---|---|
| **eCl@ss 4.0** | 27250313 |
| **eCl@ss 4.1** | 27250313 |
| **eCl@ss 5.0** | 27143423 |
| **eCl@ss 5.1** | 27143423 |
| **eCl@ss 6.0** | 27143423 |
| **eCl@ss 7.0** | 27449001 |
| **eCl@ss 8.0** | 27449001 |

### ETIM

| | |
|---|---|
| **ETIM 3.0** | EC002061 |
| **ETIM 4.0** | EC002061 |
| **ETIM 5.0** | EC002062 |

### UNSPSC

| | |
|---|---|
| **UNSPSC 6.01** | 31251501 |
| **UNSPSC 7.0901** | 31251501 |
| **UNSPSC 11** | 31251501 |
| **UNSPSC 12.01** | 31251501 |
| **UNSPSC 13.2** | 31251501 |

## Drawings

Dimensioned drawing

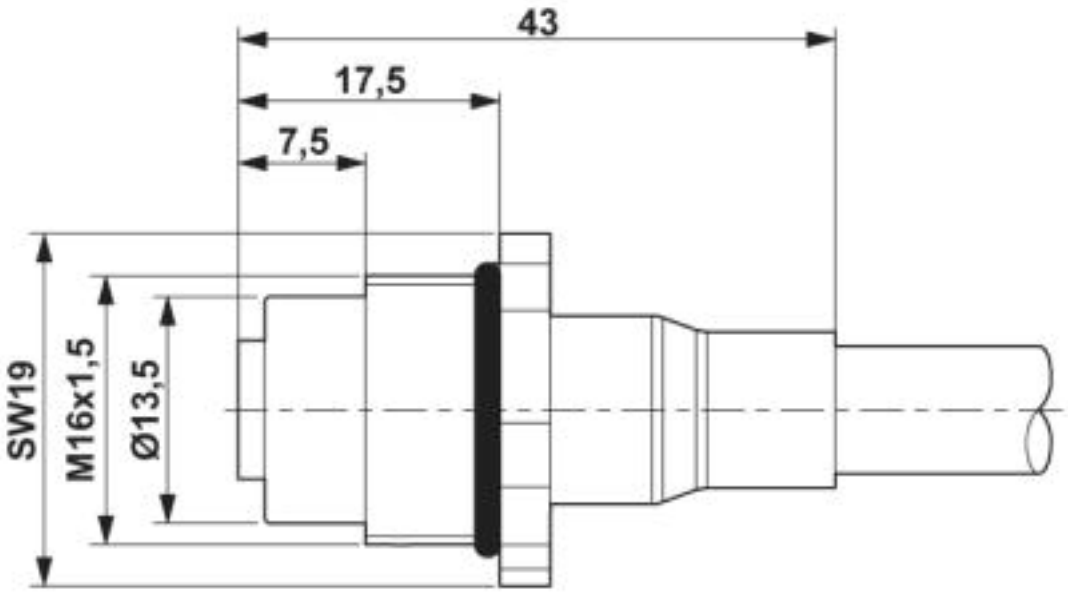


M12 flush-type connector

# Bus system flat-type plug - SACCBP-M12FS-8CON-M16/2,0-940 - 1553381

Dimensioned drawing

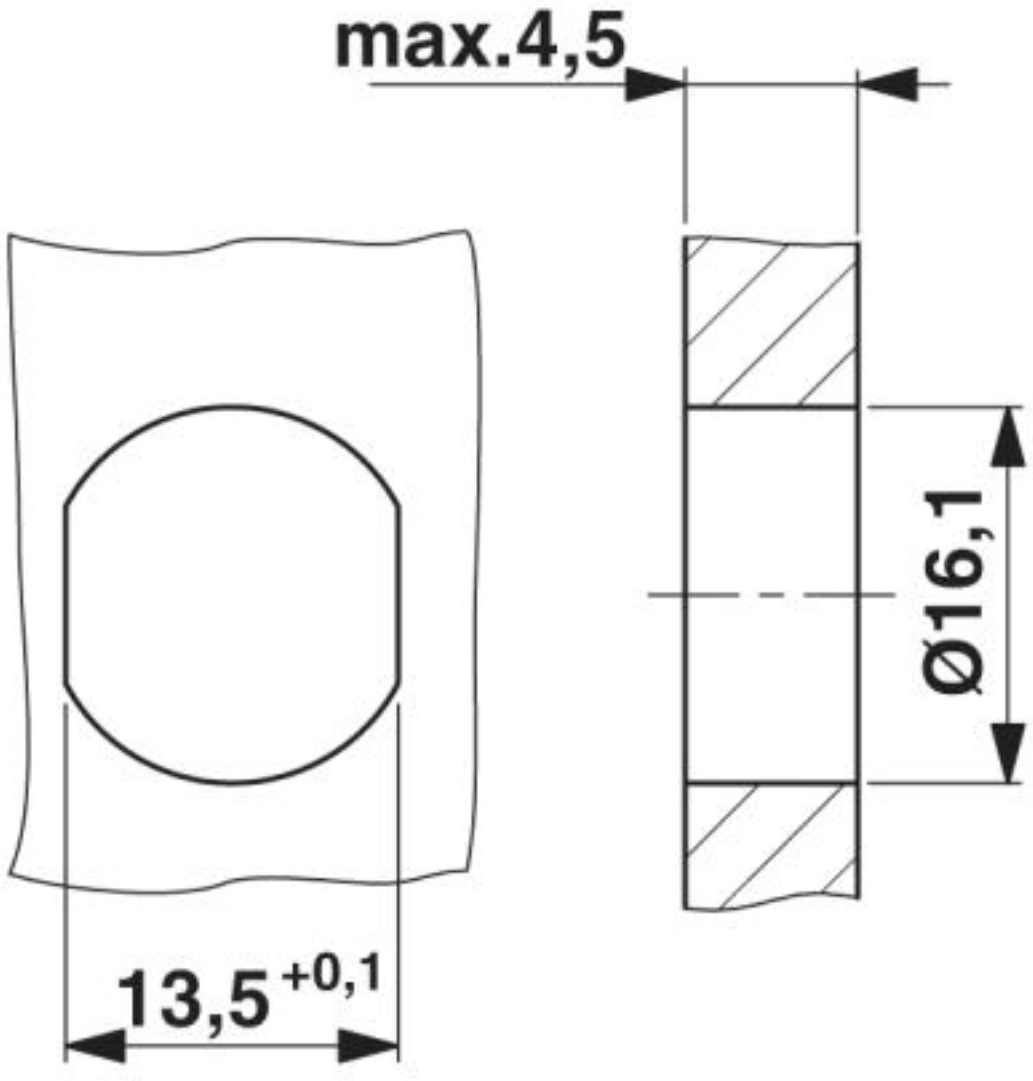


Housing cutout for M16 fastening thread, mounting panel with feed-through hole (alternatively with surface as protection against rotation)

# Bus system flat-type plug - SACCBP-M12FS-8CON-M16/2,0-940 - 1553381

Circuit diagram

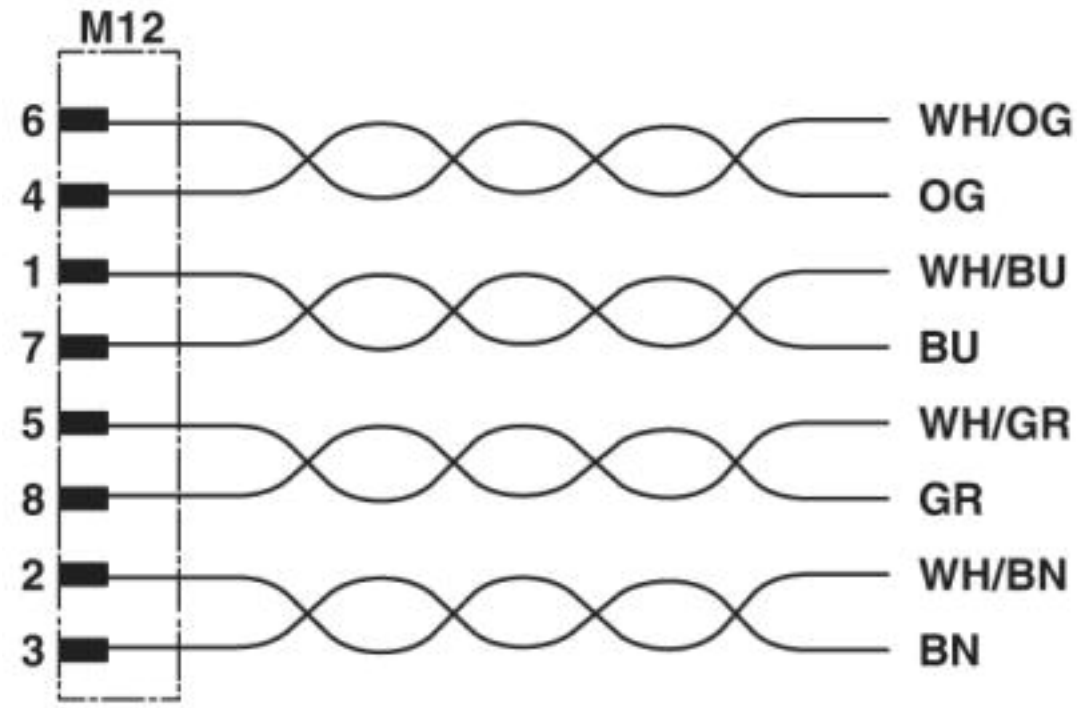


Contact assignment of the M12 plug and the M12 socket

# Bus system flat-type plug - SACCBP-M12FS-8CON-M16/2,0-940 - 1553381

Schematic diagram

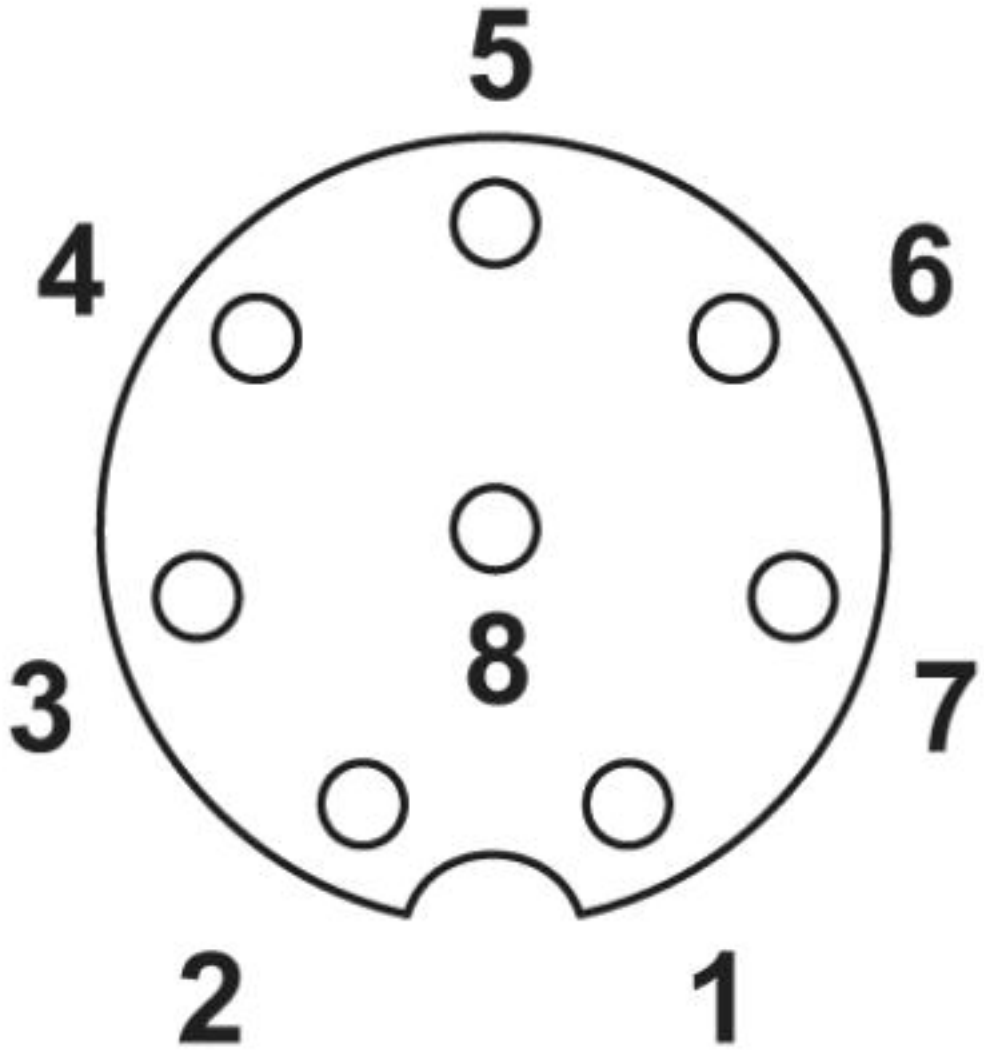


Pin assignment M12 socket, 8-pos., A-coded, view female side

# Bus system flat-type plug - SACCBP-M12FS-8CON-M16/2,0-940 - 1553381

Cable cross section

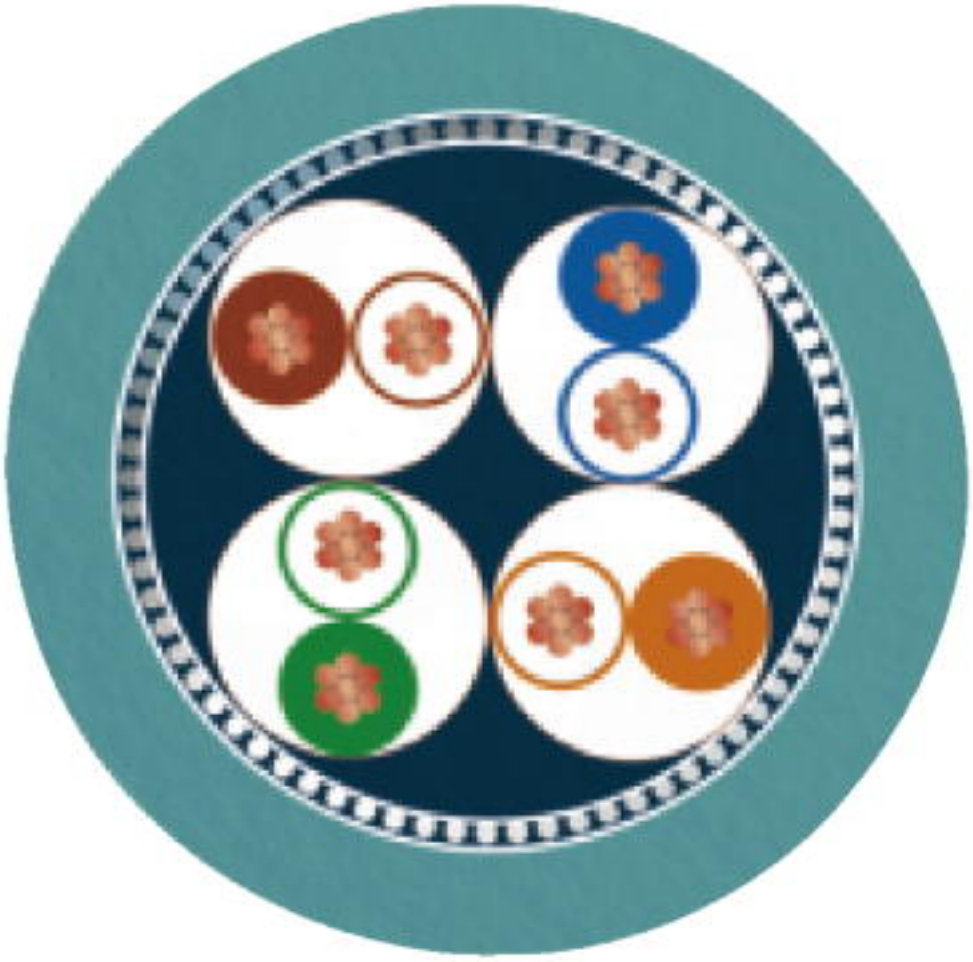

Ethernet [94F]

© Phoenix Contact 2013 - all rights reserved
http://www.phoenixcontact.com