Sensor/Actuator cable - SAC-8P-M12MS/ 5,0-PUR SH - 1526981

Please be informed that the data shown in this PDF Document is generated from our Online Catalog. Please find the complete data in the user's documentation. Our General Terms of Use for Downloads are valid (http://download.phoenixcontact.com)



Sensor/Actuator cable, 8-position, PUR halogen-free, Black-gray RAL 7021, shielded, Plug straight M12, A-coded, on Free cable end, Cable length: 5 m

Product Features

- Easy and safe: 100% electrically tested plug-in components
- Our standard: robust halogen-free PUR cable
- Reliable signal transmission – 360° shielding in environments with electromagnetic interference

Key commercial data

package_quantity	5
GTIN	4017918958305

Technical data

Dimensions

Length of cable	5 m
Stripping length of the free conductor end	50 mm

Ambient conditions

Ambient temperature (operation)	-25 °C ... 90 °C (Plug / socket)
Degree of protection	IP65
Degree of protection	IP67

General

Rated current at 40°C	2 A
Rated voltage	30 V
Number of positions	8
Contact resistance	≤ 5 mΩ
Insulation resistance	≥ 10 MΩ
Coding	A - standard
Standards/regulations	M12 connector IEC 61076-2-101
Status display	No
Protective circuit/component	Unwired
Surge voltage category	II
Pollution degree	3
Insertion/withdrawal cycles	≥ 100
Torque	0.4 Nm (M12 connector)

Sensor/Actuator cable - SAC-8P-M12MS/ 5,0-PUR SH - 1526981

Technical data

Material

Inflammability class according to UL 94	HB
Contact material	CuSn
Contact surface material	Ni/Au
Contact carrier material	TPU GF
Material of grip body	TPU, hardly inflammable, self-extinguishing
Material, knurls	Zinc die-cast, nickel-plated

Cable

Cable type	PUR halogen-free black shielded
Cable type (abbreviation)	PUR
Cable abbreviation	LiF9YC11Y
UL AWM style	20549
Conductor cross section	8x 0.25 mm² (signal line)
AWG signal line	24
Conductor structure signal line	32x 0.10 mm
Core diameter including insulation	1.17 mm ±0.02 mm
Wire colors	Brown, white, green, yellow, gray, pink, blue, red
Overall twist	8 wires around filler to the core
Shielding	Tinned copper braided shield
Optical shield covering	85 %
External sheath, color	Black RAL 9005
External cable diameter D	5.9 mm ± 0.2 mm
Smallest bending radius, fixed installation	47.2 mm
Smallest bending radius, movable installation	59 mm (Up to +60°C)
Number of bending cycles	4000000
Bending radius	59 mm
Traversing path	10 m
Traversing rate	3 m/s
Acceleration	10 m/s²
Outer sheath, material	PUR
Material conductor insulation	PP
Conductor material	Bare Cu litz wires
Insulation resistance	70 GΩ*km (at 20 °C)
Conductor resistance	max. 79 Ω/km (at 20 °C)
Nominal voltage, cable	300 V (at 20 °C)
Test voltage Core/Core	3000 V (at 20 °C)
Special properties	Flexible cable conduit capable
Flame resistance	In accordance with UL FT-2
Other resistance	hydrolysis and microbe resistant
Other resistance	partly UV-resistant in accordance with DIN EN ISO 4892-2-A
Ambient temperature (operation)	-40 °C ... 80 °C (cable, fixed installation)
Ambient temperature (operation)	-25 °C ... 80 °C (cable, flexible installation)

Sensor/Actuator cable - SAC-8P-M12MS/ 5,0-PUR SH - 1526981

Technical data

classifications

eCl@ss

eCl@ss 4.0	27060306
eCl@ss 4.1	27060306
eCl@ss 5.0	27061801
eCl@ss 5.1	27061801
eCl@ss 6.0	27061801
eCl@ss 7.0	27061801
eCl@ss 8.0	27061801

ETIM

ETIM 2.0	EC000830
ETIM 3.0	EC001855
ETIM 4.0	EC001855
ETIM 5.0	EC001855

UNSPSC

UNSPSC 6.01	31251501
UNSPSC 7.0901	31251501
UNSPSC 11	31251501
UNSPSC 12.01	31251501
UNSPSC 13.2	31251501

approvals

UL Listed / cUL Listed / GOST / cULus Listed /

Approval details

UL Listed

Nominal voltage UN	30 V
Nominal current IN	2 A
mm²/AWG/kcmil	

cUL Listed

Nominal voltage UN	30 V

Sensor/Actuator cable - SAC-8P-M12MS/ 5,0-PUR SH - 1526981

approvals

Nominal current IN	2 A
mm²/AWG/kcmil	

GOST

cULus Listed

accessories

Protective cap

PROT-M12 FS-PA-CHAIN - 1430873



Safety locking

SAC-M12-EXCLIP-M - 1558988



Conductor marking

PABA WH/15 - 1013151



Sensor/Actuator cable - SAC-8P-M12MS/ 5,0-PUR SH - 1526981

accessories

PABA YE/15 - 1013698



PABA RD/15 - 1013944



Marker carrier cable

PATG 2/15 - 1013038



PATG 3/15 - 1013041



PATG 4/15 - 1013054



Marker pen

Sensor/Actuator cable - SAC-8P-M12MS/ 5,0-PUR SH - 1526981

accessories

B-STIFT - 1051993



Cutting tools

CUTFOX-S VDE - 1212207



Stripping tool

WIREFOX SAC - 1212623



WIREFOX 10 - 1212150



Torque tool

TSD 04 SAC - 1208429



Sensor/Actuator cable - SAC-8P-M12MS/ 5,0-PUR SH - 1526981

accessories

TSD-M 1,2NM - 1212224



Screwdriver tools

TSD-M SAC-BIT ADAPTER - 1212600



SAC BIT M12-D15 - 1208432



accessories

WIREFOX SAC-1 - 1212757

Drawings

Sensor/Actuator cable - SAC-8P-M12MS/ 5,0-PUR SH - 1526981

Dimensioned drawing

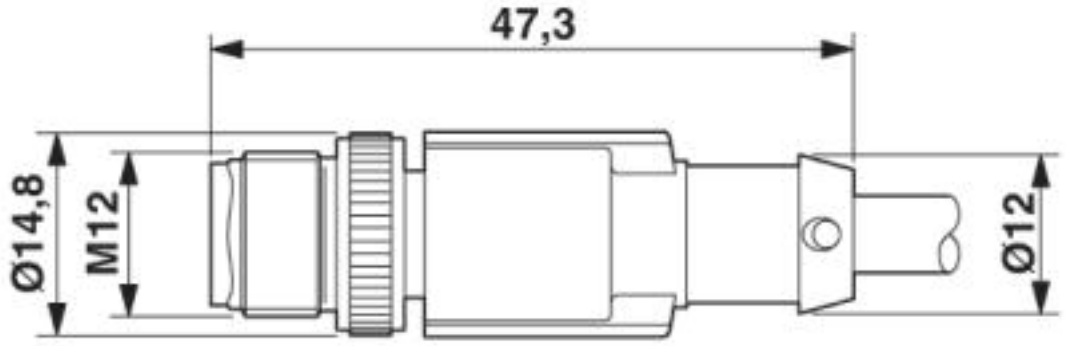

Plug, M12 x 1, straight, shielded

Circuit diagram

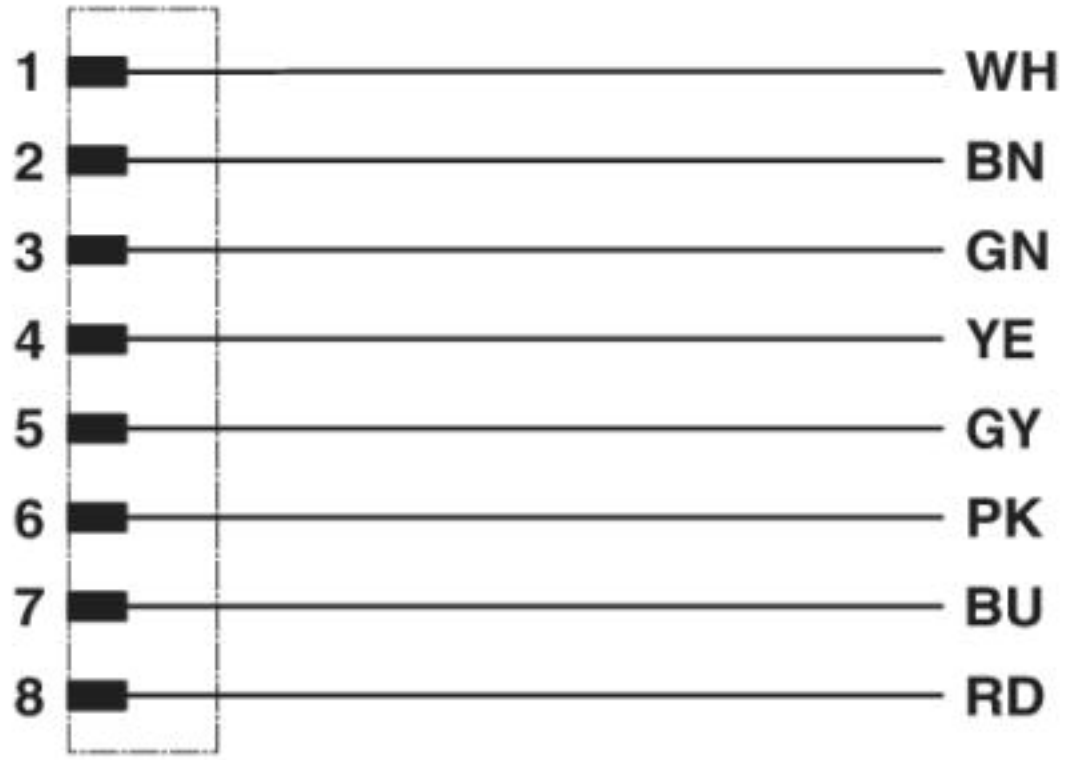

Contact assignment of the M12 plugs

Sensor/Actuator cable - SAC-8P-M12MS/ 5,0-PUR SH - 1526981

Schematic diagram

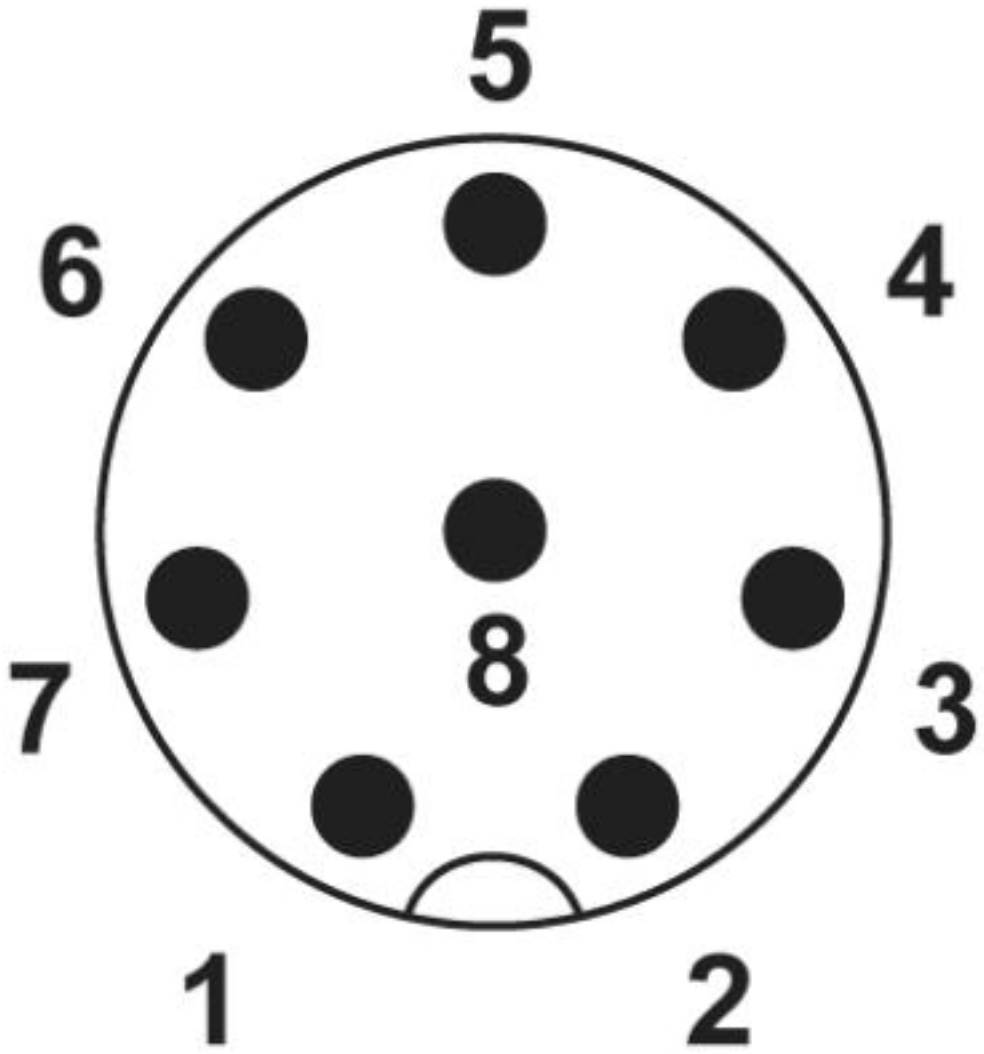

Pin assignment M12 plug, 8-pos., view plug side

Sensor/Actuator cable - SAC-8P-M12MS/ 5,0-PUR SH - 1526981

Cable cross section



PUR halogen-free black shielded [PUR]

© Phoenix Contact 2013 - all rights reserved
http://www.phoenixcontact.com