SEDECO MODEL NO. BN-0651 for AC 230V Red, Orange or Clear

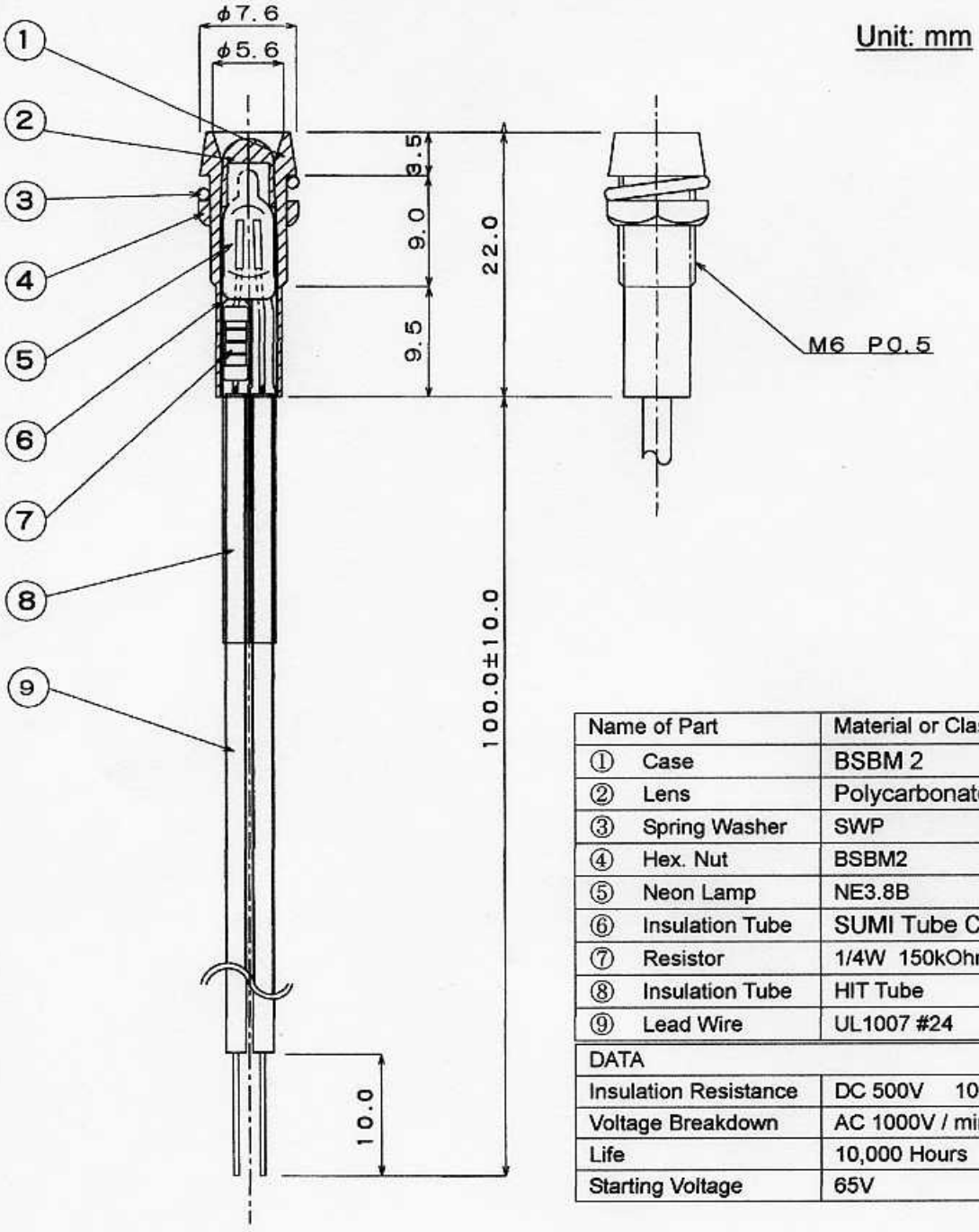

Name of Part	Material or Class	Colour or Finish
① Case	BSBM 2	Cr-3
② Lens	Polycarbonate	Red, Orange or Clear
③ Spring Washer	SWP	Ni-3
④ Hex. Nut	BSBM2	Ni-3
⑤ Neon Lamp	NE3.8B	Clear
⑥ Insulation Tube	SUMI Tube C	Clear
⑦ Resistor	1/4W 150kOhm	
⑧ Insulation Tube	HIT Tube	Black
⑨ Lead Wire	UL1007 #24	Black

DATA	
Insulation Resistance	DC 500V 100MOhm or more
Voltage Breakdown	AC 1000V / minute
Life	10,000 Hours
Starting Voltage	65V