used for: D-SUB

POS.	A -0.76	B -0.25	C	Part-NO.
9	31.19	16.46	$25.00^{+0.12}_{-0.13}$	**164X11899X**
15	39.52	24.79	$33.30^{+0.15}_{-0.1}$	**164X11909X**
25	53.42	38.50	47.04 ±0.13	**164X11919X**
37	69.70	54.96	63.50 ±0.13	**164X11929X**

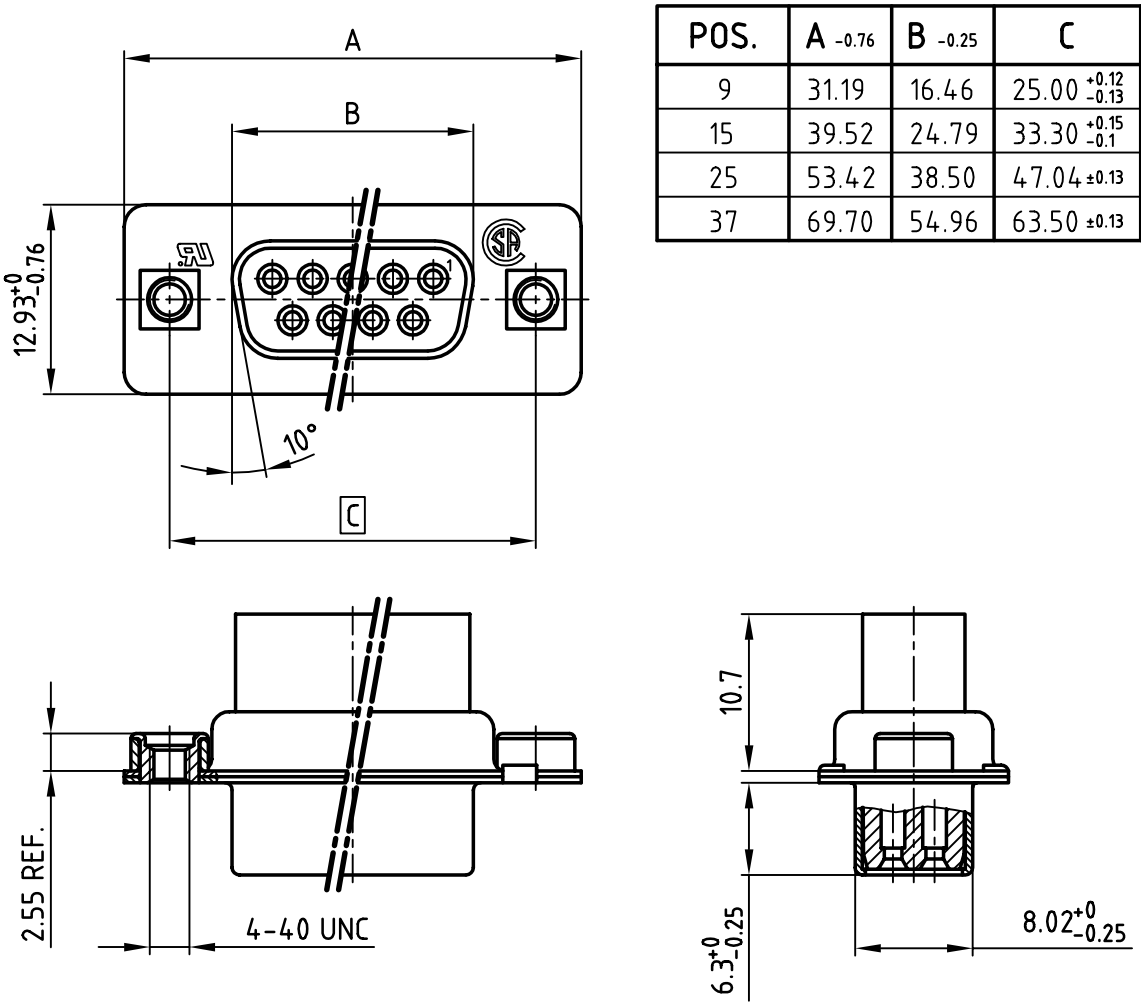

NOTES:

1. METALSHELLS: STEEL; min. 320µ" TIN
2. INSULATORS: PBT GF UL 94 V-0, BLACK
3. THREADED INSERT: COPPER ALLOY; min. 200µ" TIN over 80µ" NICKEL
4. COLLAR: COPPER ALLOY; min. 200µ" TIN over 80µ" NICKEL
5. MAXIMUM TORQUE VALUE FOR THREAD: 6" LBS
6. [ ] = CRITICAL DIMENSION: SPC

Directive 2002/95/EC „RoHS" Compliant

THIS DRAWING MAY NOT BE COPIED OR REPRODUCED IN ANY WAY, AND MAY NOT BE PASSED ON TO A THIRD PARTY WITHOUT WRITTEN PERMISSION. OWNERSHIP AND COPYRIGHT OF CONEC GmbH

DO NOT ALTER CAD DRAWING BY HAND

rev.	description	date	name

tolerance

2001	date	name
drawn	20.07.	Parei
appd.	20.07.	E. Mickenbecker
norm	DIN 41652	
d-old		

CONEC®

scale: 2:1

material: SEE NOTES

title: D-SUB FEMALE
CRIMP STYLE 9-37pos.
with threaded insert

dwg no: 16K1A246A

AutoCAD 2000

DIN-A 4

sh: 1/1

part no: SEE TABLE