Base strip - PTSM 0,5/ 8-HV-2,5-THR R44 - 1778612

Please be informed that the data shown in this PDF Document is generated from our Online Catalog. Please find the complete data in the user's documentation. Our General Terms of Use for Downloads are valid (http://download.phoenixcontact.com)



Header, Nominal current: 6 A, Rated voltage (III/2): 160 V, Number of positions: 8, Pitch: 2.5 mm, Color: Black, Contact surface: Tin, Assembly: SMD/THT/THR

Product Features

- Compatible with PTSM.../PTPM... plugs
- 2.5 mm pitch
- High current carrying capacity of 6 A
- Supplied in tape-on-reel packing according to IEC 60286-3 for automated mounting
- Rugged solder anchor for secure, mechanical fixing to the surface
- Specifically designed for use in reflow and SMT processes

Key commercial data

package_quantity	330
GTIN	4046356529785

Technical data

Dimensions

Length	5 mm
Height	7.5 mm
Pitch	2.5 mm
Dimension a	17.5 mm
Pin dimensions	0,6 x 0,6 mm
Pin spacing	2.50 mm
Hole diameter	1.1 mm

General

Range of articles	PTSM 0,5/..-HV-THR
Insulating material group	IIIa
Rated surge voltage (III/3)	2.5 kV
Rated surge voltage (III/2)	2.5 kV
Rated surge voltage (II/2)	2.5 kV
Rated voltage (III/3)	50 V
Rated voltage (III/2)	160 V
Rated voltage (II/2)	160 V
Connection in acc. with standard	EN-VDE

Base strip - PTSM 0,5/ 8-HV-2,5-THR R44 - 1778612

Technical data

General

Nominal current I_N	6 A
Maximum load current	6 A
Insulating material	LCP
Inflammability class according to UL 94	V0
Color	Black
Number of positions	8

classifications

eCl@ss

eCl@ss 4.0	272607xx
eCl@ss 4.1	27260701
eCl@ss 5.0	27260701
eCl@ss 5.1	27260701
eCl@ss 6.0	27260704
eCl@ss 7.0	27440402
eCl@ss 8.0	27440402

ETIM

ETIM 3.0	EC001121
ETIM 4.0	EC002637
ETIM 5.0	EC002637

UNSPSC

UNSPSC 6.01	30211810
UNSPSC 7.0901	39121409
UNSPSC 11	39121409
UNSPSC 12.01	39121409
UNSPSC 13.2	39121409

approvals

UL Recognized / cUL Recognized / GOST / GOST / UL Recognized / cULus Recognized /

Approval details

UL Recognized

Usegroups	**B**
Nominal voltage UN	150 V
Nominal current IN	6 A
mm²/AWG/kcmil	

Base strip - PTSM 0,5/ 8-HV-2,5-THR R44 - 1778612

approvals

cUL Recognized

Usegroups	B
Nominal voltage UN	150 V
Nominal current IN	6 A
mm²/AWG/kcmil	

GOST

Usegroups	B
Nominal voltage UN	150 V
Nominal current IN	5 A
mm²/AWG/kcmil	

cULus Recognized

Drawings

Base strip - PTSM 0,5/ 8-HV-2,5-THR R44 - 1778612

Drilling diagram

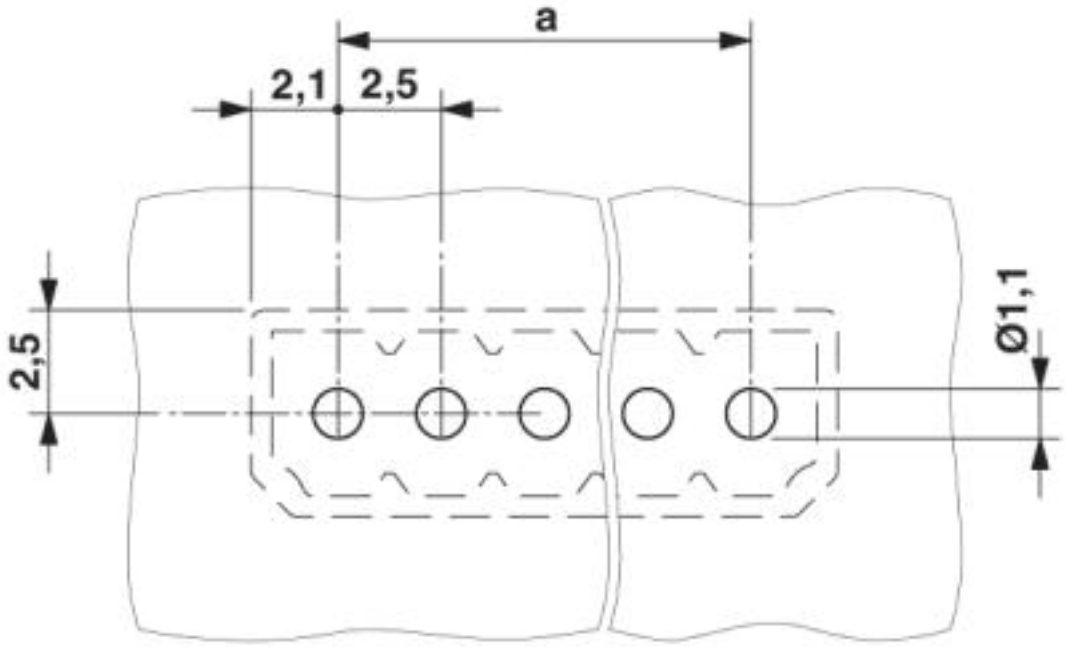

Diagram

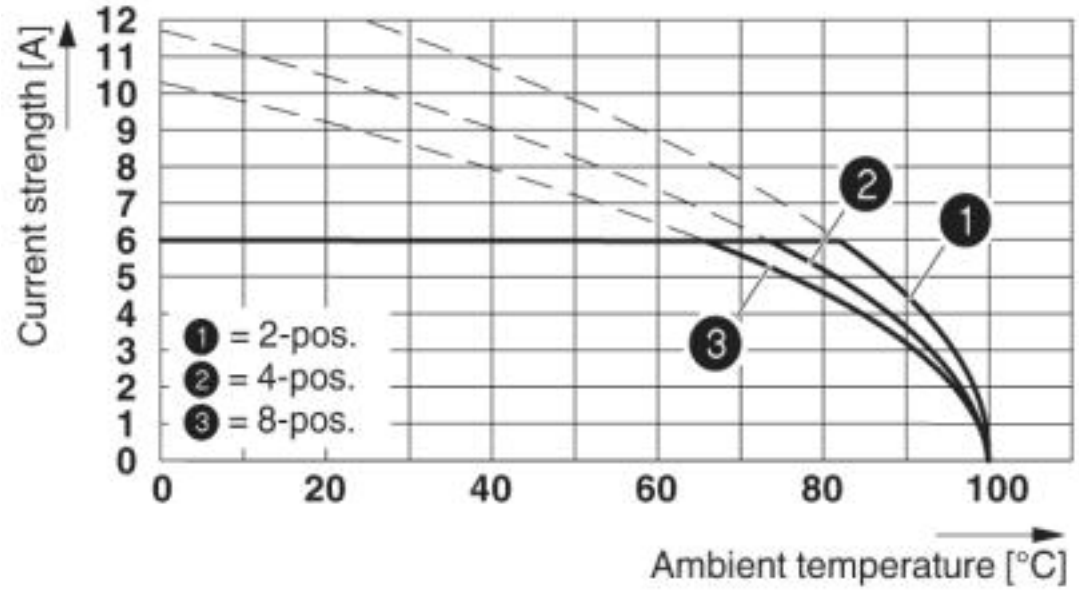

Derating curve for: PTSM 0,5/...-P-2,5 with PTSM 0,5/...-HV-2,5-THR R...

Base strip - PTSM 0,5/ 8-HV-2,5-THR R44 - 1778612

Dimensioned drawing

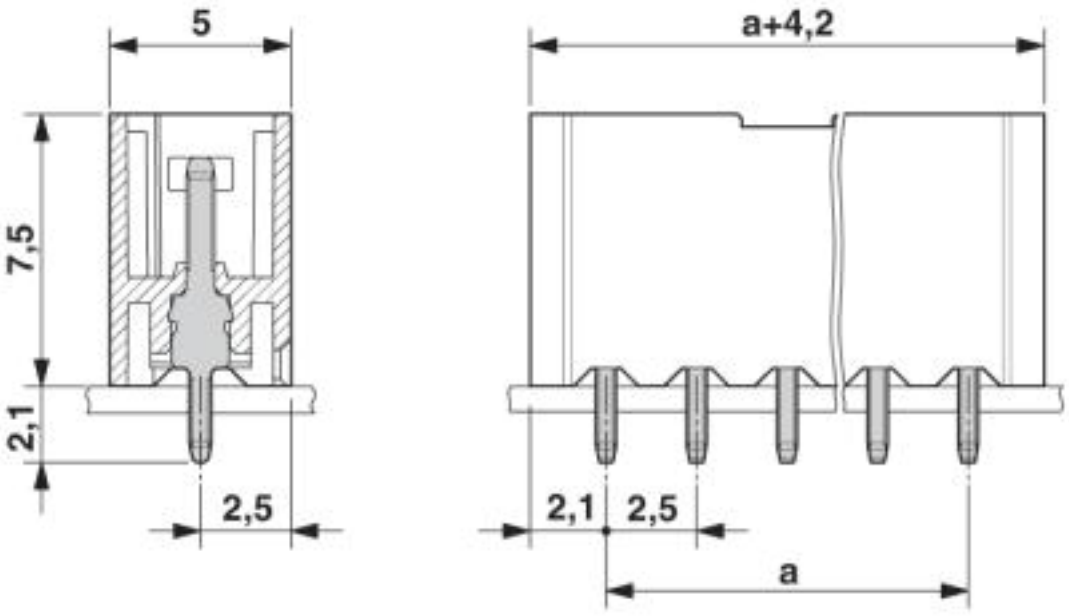

Base strip - PTSM 0,5/ 8-HV-2,5-THR R44 - 1778612

Dimensioned drawing

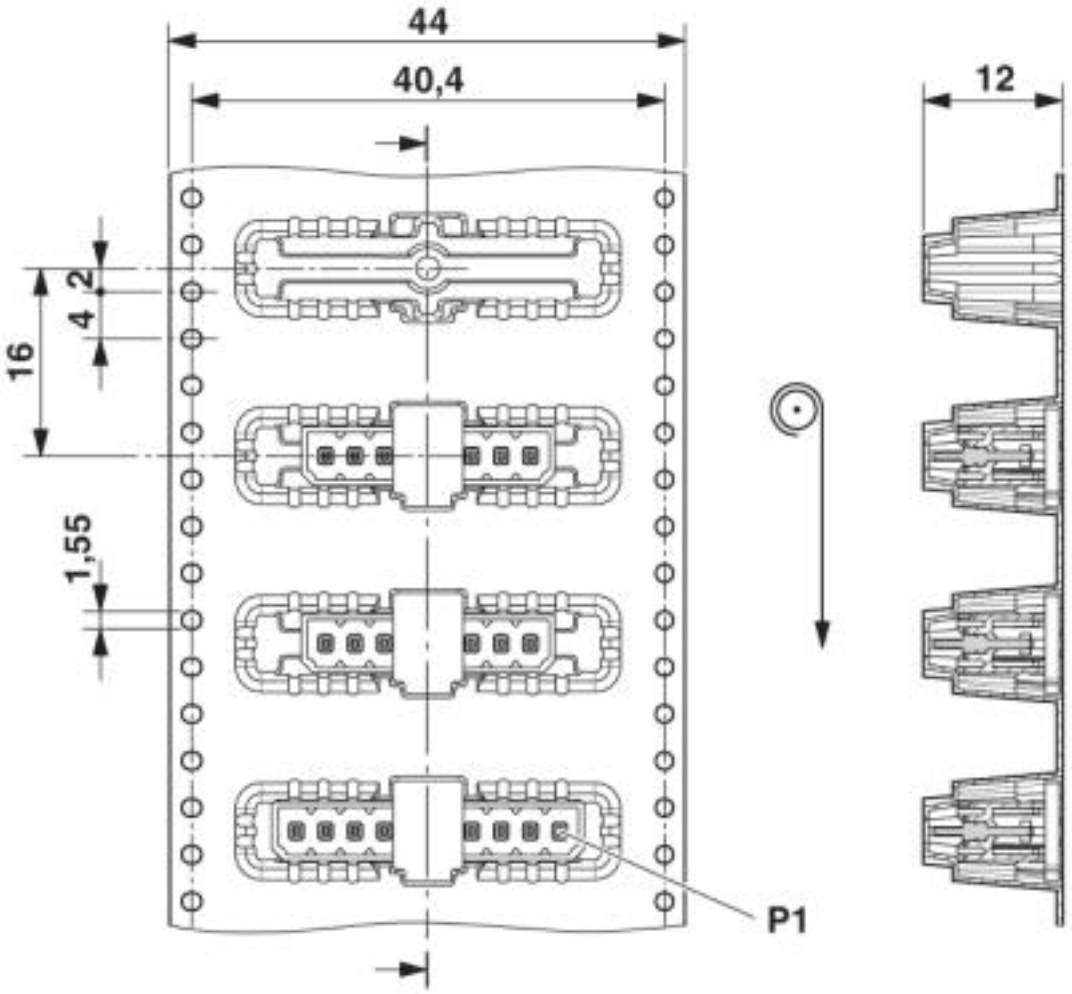

© Phoenix Contact 2013 - all rights reserved
http://www.phoenixcontact.com