THIS DRAWING IS UNPUBLISHED RELEASED FOR PUBLICATION 2017
© COPYRIGHT 1997 BY TE CONNECTIVITY ALL RIGHTS RESERVED.

REVISIONS

P	LTR	DESCRIPTION	DATE	DWN	APVD
	C	REVISED PER PCN E-18-001206	24JAN2018	JA	DM
	C1	REVISED PER PCN E-19-018080	19NOV2019	MK	DM

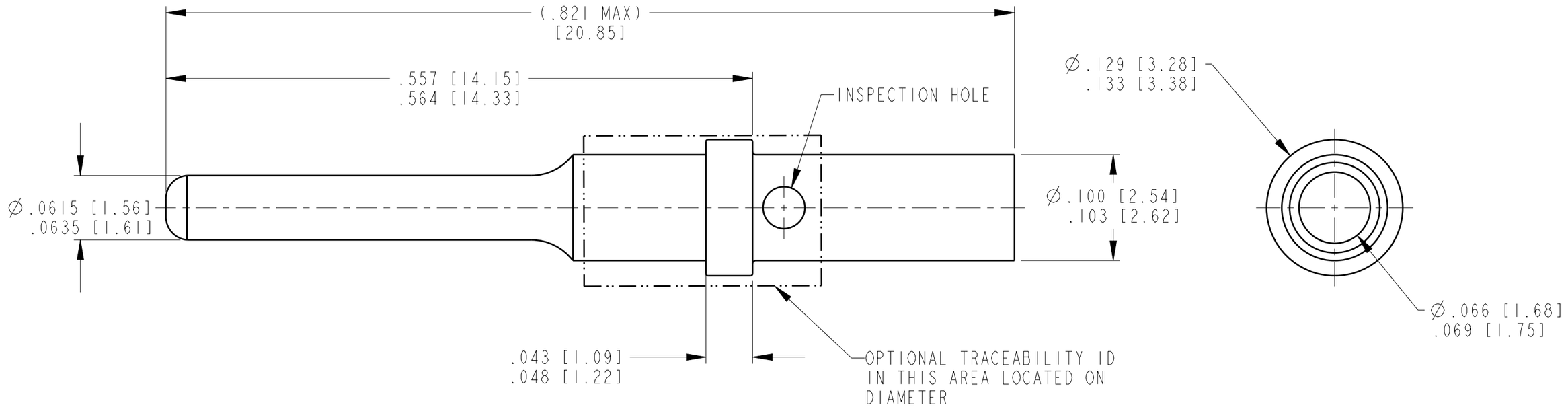

TE INTERNAL PN	DEUTSCH PN	PLATING
0460-202-1631	0460-202-1631	GOLD
0460-202-16141	0460-202-16141	NICKEL

C1 1. SEE APPLICATION SPECIFICATION 114-151004 FOR CRIMP TOOLS AND WIRE RANGE

NOTES:

THIS DRAWING IS A CONTROLLED DOCUMENT.

DIMENSIONS: INCHES [mm]

TOLERANCES UNLESS OTHERWISE SPECIFIED:
0 PLC ±
1 PLC ±
2 PLC ±
3 PLC ±
4 PLC ±
ANGLES ±

MATERIAL

FINISH

DWN D.MEYER 18DEC1997
CHK VLADIMIR TOMSA 25MAY1999
APVD R.REED 25MAY1999
PRODUCT SPEC 108-151004
APPLICATION SPEC 114-151004
WEIGHT 0.55g

TE Connectivity

NAME CONTACT PIN SIZE 16

SIZE	CAGE CODE	DRAWING NO	RESTRICTED TO
A3	4AFU8	C-0460-202-16XX	

CUSTOMER DRAWING

SCALE 10:1 SHEET 1 OF 1 REV C1

1470-19 (3/13)