400 Series Buccaneer®



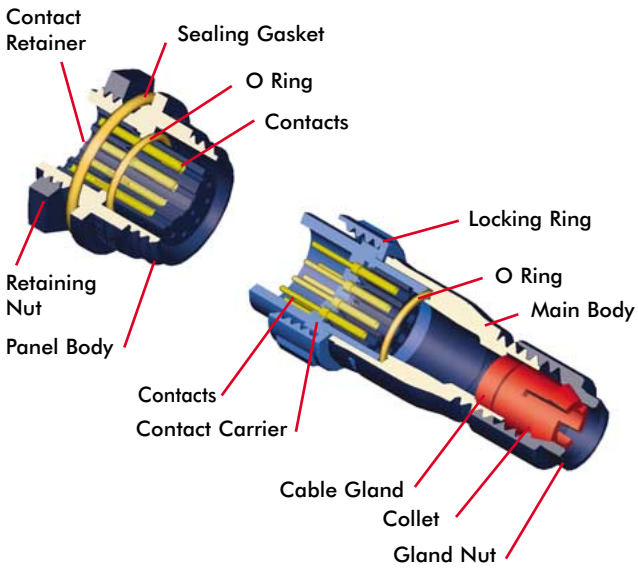

- Sealed to IP68 when mated
- IP68 rating tested at 1.054kg/sq cm (15lb/sq in) 10m depth for 2 weeks
- 2 and 3 pole - 8A, 250V rating
- 4, 6 and 8 pole - 5A, 125V rating
- 10 and 12 pole - 1A, 50V rating
- 2.5mm contact engagement for electrical integrity
- 'Scoop proof' contacts
- Contact inserts are part of body moulding
- Cable range from 3 to 7mm
- Overall length (flex + flex in-line) 80mm
- Gold plated contacts
- Diameter over coupling ring 19.1mm
- Flex, Flex In-Line, Front Panel, Rear Panel and PCB mounting body styles
- Plug and Socket versions in all body styles
- Flame Retardant moulding material - Polyamide UL94-V0
- Contacts supplied separately (except PCB version)
- Sealing caps available to maintain IP68 rating
- Secure sealing system
- Crimp and solder contacts
- PCB mounting connector supplied with contacts pre-loaded
- Front and rear panel mounting panel connectors
- UL, CSA and VDE approvals

400 Series Buccaneer®

FLEX CABLE CONNECTOR



PX0410/P PX0410/S

- Mates with Flex In-line or Panel mounting versions PX0411, PX0412 & PX0413
- Screw locking ring
- Contacts supplied separately

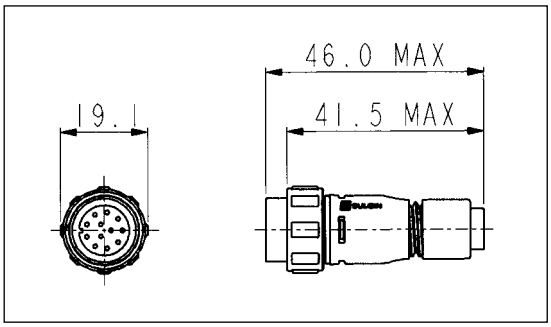

IN-LINE FLEX CABLE CONNECTOR



PX0411/P PX0411/S

- Mates with Flex Cable connector PX0410
- For in-line cable connection
- Contacts supplied separately

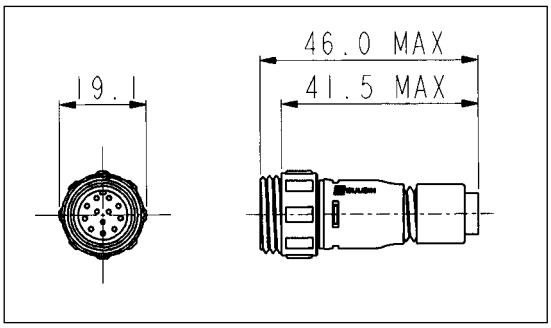

FRONT PANEL MOUNTING CONNECTOR



PX0412/P PX0412/S

- Mates with Flex Cable connector PX0410
- Front Panel mounting
- Single hole fixing
- Contacts supplied separately

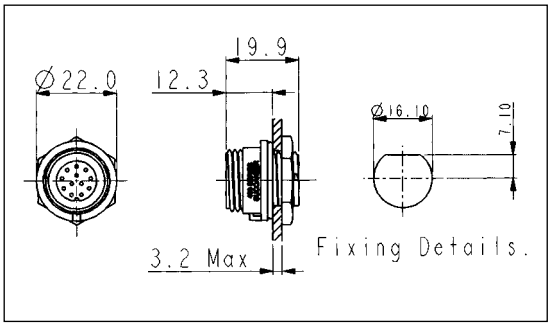

REAR PANEL MOUNTING CONNECTOR



PX0413/xxP PX0413/xxS

- Mates with Flex Cable connector PX0410
- Rear Panel mounting
- Single hole fixing
- Contacts supplied separately
- 2, 3, 4, 6, 8, 10 or 12 pole

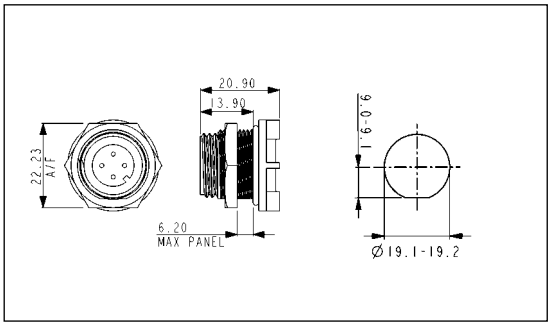

PCB MOUNTING CONNECTOR



PX0413/xxP/PC PX0413/xxS/PC

- Mates with Flex Cable connector PX0410
- PCB Rear Panel mounting
- Straight PC spills
- Supplied with pre-loaded gold plated contacts
- 2, 3, 4, 6, 8, 10 or 12 pole

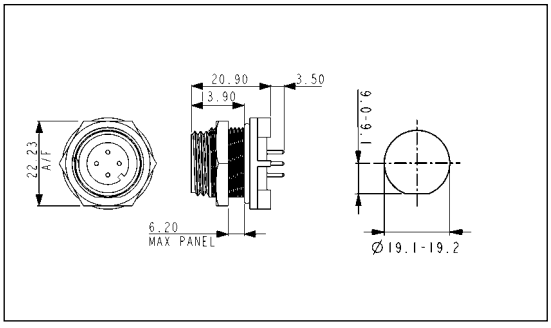

400 Series Buccaneer®

SEALING CAPS AND ACCESSORIES



PX0480 PX0480/1 PX0481 PX0484

- Maintains IP68 Rating of Unmated Connectors
- PX0480. Fits PX0412 style (panel mounting)
- PX0480/1. Fits PX0411 style (flex in-line)
- PX0481. Fits PX0410 style (flex body)
  PX0484. Fits PX0413 styles (PCB and rear panel mount)

Gland Packs

Part No	Description
PX0482	Pack of 4 pairs cable glands and collets to suit cables from 3.0 to 5.0mm diameter.
PX0483	Pack of 4 pairs cable glands and collets to suit cables from 5.0 to 7.0mm diameter.

CRIMP CONTACTS

Pole	Current Rating	Pin	Socket	Pack Qty	Cable Acceptance (dia)
2, 3	8A	SA3350	SA3349	10	20 - 24 AWG
4, 6, 8	5A	SA3348	SA3347	10	22 - 26 AWG
10, 12	1A	SA3180	SA3179	10	24 - 28 AWG

SOLDER CONTACTS

Pole	Current Rating	Pin	Socket	Pack Qty	Cable Acceptance (dia)
2, 3	8A	SA3350/1	SA3349/1	10	20 - 24 AWG
4, 6, 8	5A	SA3348/1	SA3347/1	10	22 - 26 AWG
10, 12	1A	SA3180/1	SA3179/1	10	24 - 28 AWG

CONTACT INSERTION TOOLS

	Poles	Contact rating	Colour	Part No
Insertion/Extraction Tool	2,3	8A	Blue	13027/2
Insertion/Extraction Tool	4,6,8	5A	Red	13027/1
Insertion/Extraction Tool	10,12	1A	Green	13027

CRIMP TOOLS

	Pole	Contact rating	Colour	Part No
Positioner	2,3	8A	Blue	14025/8AMP
Positioner	4,6,8	5A	Red	14025/5AMP
Positioner	10,12	1A	Green	14025/1AMP
8 Indent Crimp Tool for use with positioners				14025

ORDERING INFORMATION

- Determine body style, i.e. PX0410 = flex body, PX0411 = flex in-line body.
- Determine number of contacts & type, i.e. 02 = 2 way, P = pin contacts.
- Determine cable range, i.e. 3035 = 3.0 to 3.5mm cable accommodation, not required for PX0412 or PX0413 (panel connectors).
- Choose appropriate contacts pack, i.e. SA3350 = pin contacts suitable for 2 & 3 way connectors, supplied in pack quantities of 10. Not needed for PX0413/PC as pre-loaded.
- Is a sealing cap required?
- Is an insertion tool required?
- Is a crimp tool required?

400 Series Buccaneer®

SPECIFICATION

Electrical:

Poles:	2, 3	4, 6, 8	10, 12
Current Rating:	8A	5A	1A
Voltage Rating:	250Vac/dc	125Vac/dc	50Vac/dc
Contact Resistance:	<5mΩ		
Insulation Resistance:	>10^6MΩ (@ 500V d.c.)		
AC Breakdown Voltage:	2.5kV		
Operating Temperature Range:	–40° to +80°C		
Approvals:	Approvals pending for PX0413		

Material:

Body Mouldings:	Polyamide
Flammability Rating:	UL94V-0
UV Resistance:	To EN 50021:1999
Contacts:	Copper alloy, Gold plated
O Rings:	Nitrile
Panel Sealing O Ring:	Nitrile
RoHS	Compliant

Mechanical:

Sealing:	IP68, EN 60529 tested @ 1.054kg/sq cm (15lb/sq in) 10m depth for 2 weeks
Cable Acceptance:	3.0 - 7.0mm
Contact Accommodation:	2, 3 pole, 20 - 24 AWG 4, 6, 8 pole, 22 - 26 AWG 10, 12 pole, 24 - 28 AWG
Termination:	Crimp, solder and PCB

Insertion/Withdrawal Force:

No. poles:	2	3	4	6	8	10	12
Insertion Force (typ):	19N	25N	27N	27N	28N	55N	62N
Withdrawal Force (typ):	12N	17N	17N	21N	22N	25N	29N

Tightening Torques: Panel mount (PX0412) Front fixing nut:	1.36Nm (12lbf.in.)
Panel mount (PX0413) Rear fixing nut:	1.36Nm (12lbf.in.)
Cable Retention force:	
3mm dia	60N
4.7mm dia	80N

Dimensions:

Overall dimensions of connectors when mated together

Flex + Flex In-Line	80mm
Dia. over coupling ring	19.1mm

PCB CONTACT LAYOUT

Sockets

Contact numbers viewed from rear of panel

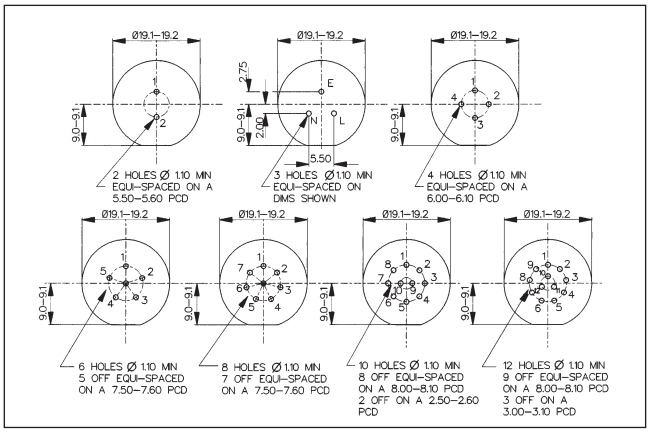

Plugs

Contact numbers viewed from rear of panel

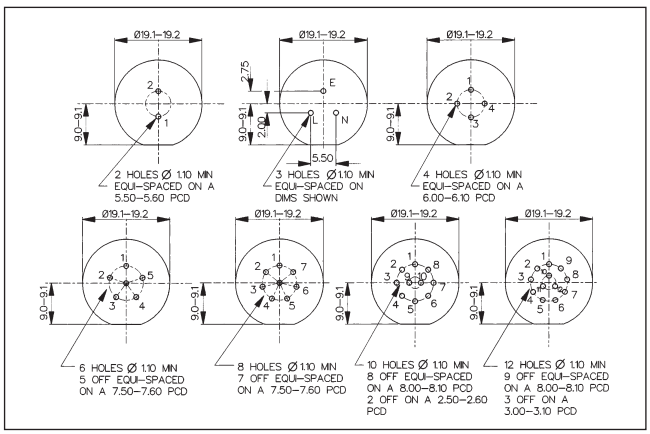

CONTACT LAYOUT



2 pole (8 Amp) | 3 pole (8 Amp) | 4 pole (5 Amp) | 6 pole (5 Amp) | 8 pole (5 Amp) | 10 pole (1 Amp) | 12 pole (1 Amp)

PART NO. SYSTEM

PX04xx / xx x / xxxx

Body Styles
PX0410 = Flex body
PX0411 = Flex in-line body
PX0412 = Front panel mounting body
PX0413 = Rear panel/PCB mounting body

Number Contacts
02 = 2 pole, **03** = 3 pole, **04** = 4 pole, **06** = 6 pole
08 = 8 pole, **10** = 10 pole, **12** = 12 pole
(PX0413: 4, 6, 8, 10 & 12 pole only)

Contact Type
P = Pin, **S** = Socket

For PX0410 and PX0411 cable connectors - Cable Entry Size:

3035 = 3.0 - 3.5mm	(Light Grey)	**5055** = 5.0 - 5.5mm	(Yellow)
3540 = 3.5 - 4.0mm	(Grey)	**5560** = 5.5 - 6.0mm	(Blue)
4045 = 4.0 - 4.5mm	(Green)	**6065** = 6.0 - 6.5mm	(White)
4550 = 4.5 - 5.0mm	(Red)	**6570** = 6.5 - 7.0mm	(Black)

Cable gland and collet supplied in colour coded pairs.

For PX0413 PCB/Rear Panel Mount:
PC = Pre-loaded PC pins
Blank = no pins supplied

For PX0412 Front Panel Mount:
Suffix not required - leave blank

Examples:
PX0410/10S/4045 = Flex cable connector, 10 socket contacts with gland and collet for cables between 4.0 and 4.5mm diameter (supplied less contacts).
PX0412/08P = Front panel mounting connector, 8 pin contacts (supplied less contacts.)
PX0413/06P = Rear panel mounting connector, for 6 pin contacts (supplied less contacts).
PX0413/04P/PC = Rear panel/PCB connector, 4 pin contacts, PCB mounting (supplied with contacts loaded).