Alle Rechte vorbehalten/ *All rights reserved*

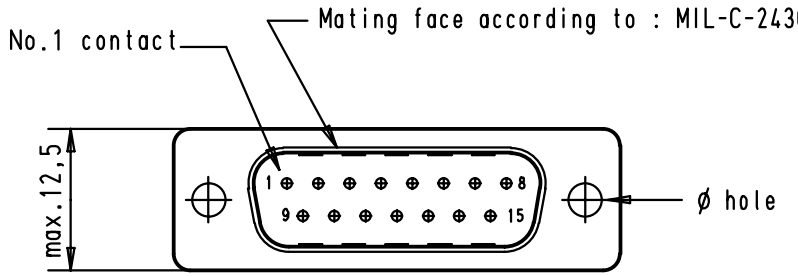

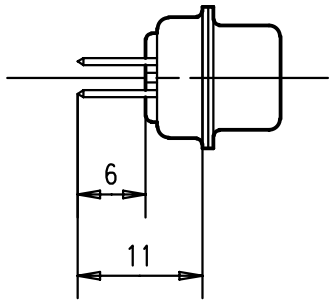

assembly position

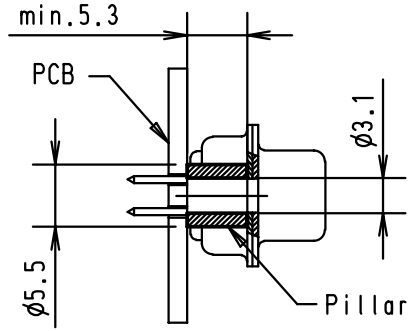

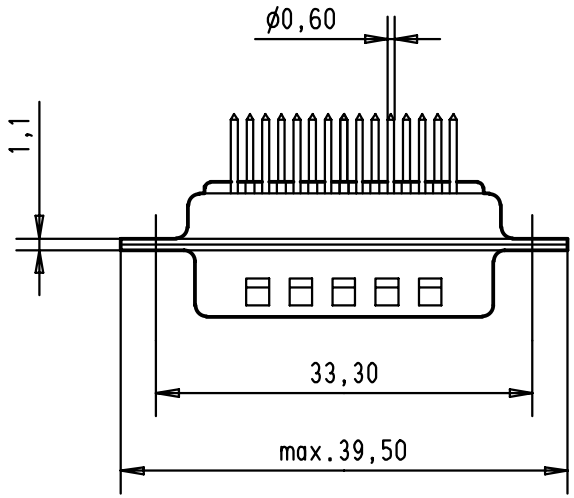

PCB layout hole
component side
(PCB holes plating : Tin)

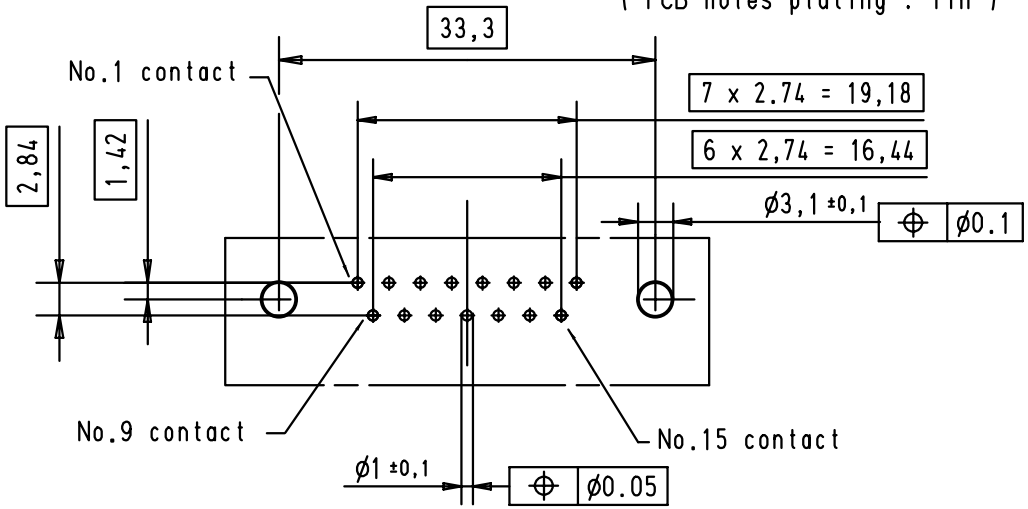

09 67 015 5655	3.1 ± 0.1	2			
09 67 015 5654	3.1 ± 0.1	3			
			27993	04/04/01	AF
Part number	ø hole	Performance level	Mod.	Dat.	Name

	Dat.	Name
Detail.	04/04/01	AF
Insp.		
Stand.		

All Dim. in mm
Orig. Size DIN A 4

D-Sub, Male, Straight, 15 poles with turned solder contacts and hole

Maßstab/ *Scale* 1.5:1

HARTING EURL
F-95972 Paris

TB 0967015565x

Sub.

Blatt/ *Page* 1/1