Alle Rechte vorbehalten/ *All rights reserved*

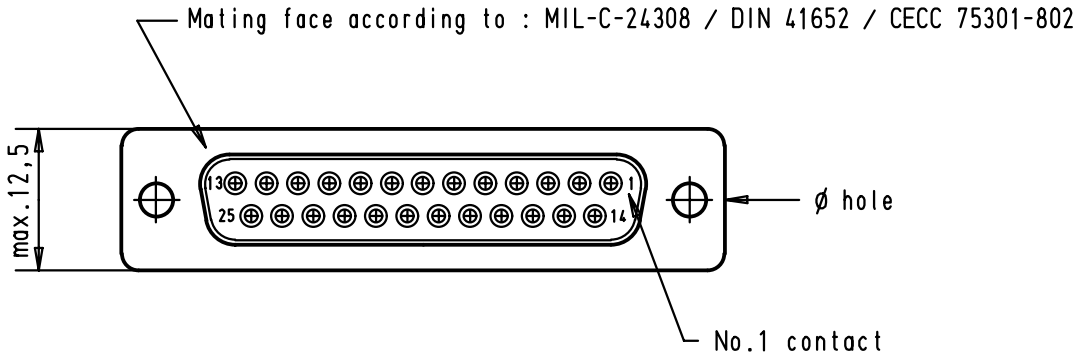

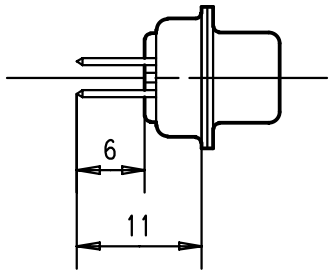

assembly position

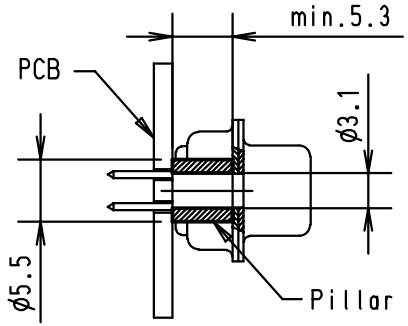

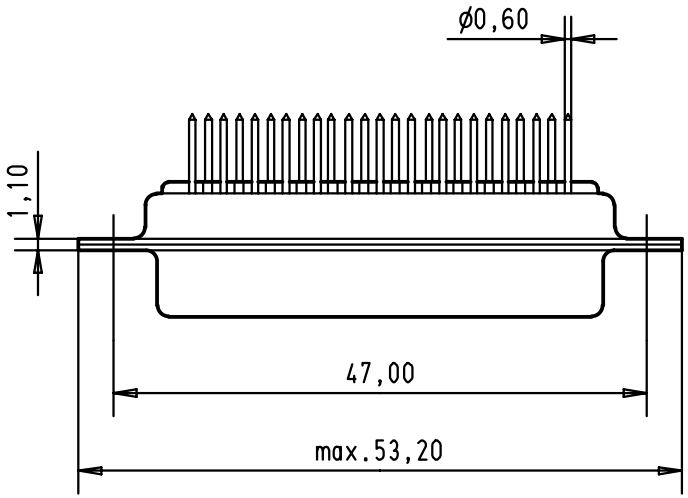

PCB layout hole
component side
(PCB holes plating : Tin)

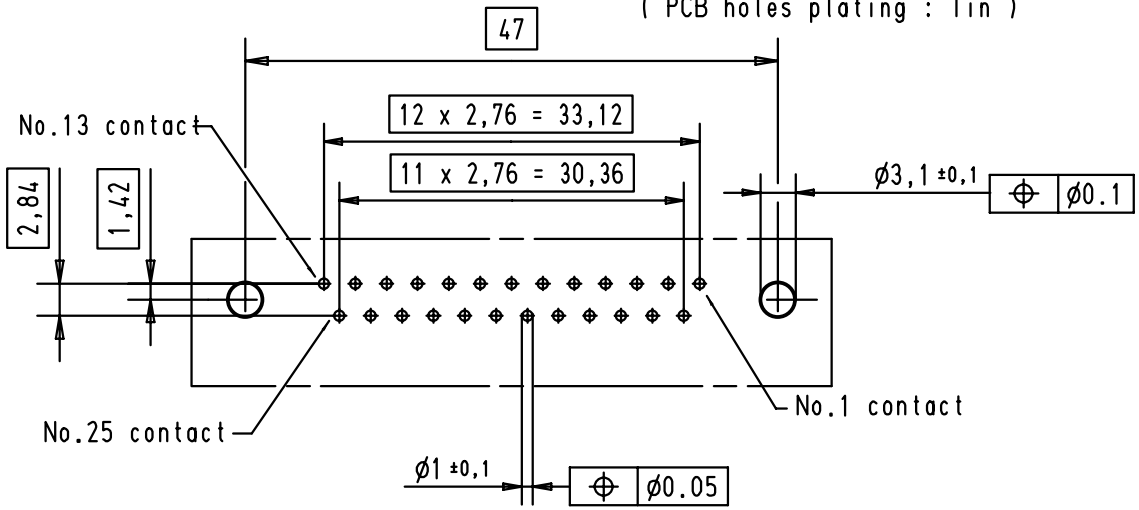

Part number	ø hole	Performance level	Mod.	Dat.	Name
09 67 025 4755	3.1 ± 0.1	2			
09 67 025 4754	3.1 ± 0.1	3	27993	04/04/01	AF
			27974	07/feb/01	jfb

	Dat.	Name
Detail.	07/feb/01	jfb
Insp.		
Stand.		

All Dim. in mm
Orig. Size DIN A 4

D-Sub, Female, Straight, 25 Poles
with turned solder contacts
and hole

Maßstab/ *Scale* 1.5:1

HARTING EURL
F-95972 Paris

TB 0967025475x

Sub.

Blatt/ *Page* 1/1