REVISIONS		
ISS	ZONE	DESCRIPTION\PER REQUEST\DATE

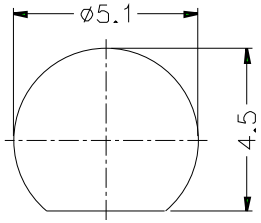

RECOMMENDED MOUNTING HOLE

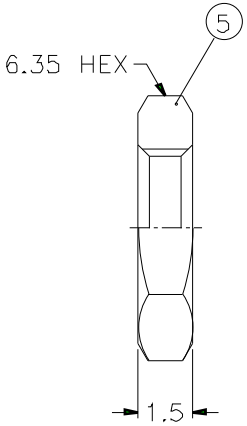

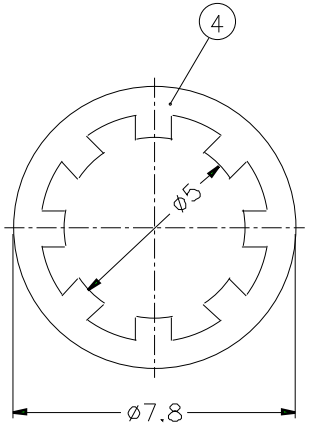

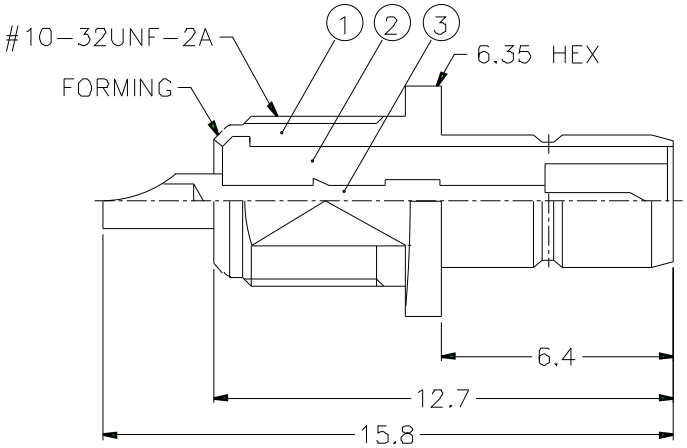

1. MAX. PANEL THICKNESS=2.4mm

NOTES: FINISH (PLATING THICKNESS IN MICRO-INCHES)
1. BRASS PER QQ-B-626
2. BRASS PER QQ-B-613
3. GOLD PL. 3 MIN. THICK OVER NICKEL PL. 100 MIN. THICK OVER COPPER STRIKE
4 GOLD PL 30 MIN. THICK OVER NICKEL PL 100 MIN. THICK OVER COPPER STRIKE
5 TEFLON MIL-P-19468

NO.	DESCRIPTION	MATERIAL	FINISH	Q'TY	DRAWING NO.
5	HEX NUT	NOTE 1	NOTE 3	1	HN635-10-32X15
4	LOCK WASHER	NOTE 2	NOTE 3	1	LW-78/5X05
3	CONTACT PIN	NOTE 1	NOTE 4	1	SMB7430-3-A
2	INSULATOR	NOTE 5	NATURAL	1	SMB7310-2T-50-A
1	BODY	NOTE 1	NOTE 3	1	SMB7310-1-A

DIMENSIONS ARE IN MILLIMETERS

UNLESS OTHERWISE SPECIFIED TOLERANCES
0.5-6 = ±0.2
6-30 = ±0.4
30-120 = ±0.6
120-315 = ±1
315-1000 = ±1.6
1000-2000 = ±2.4

SCALE 5/1 | ISSUE A

PART NO. SMB1351B1-3GT30G-50

APPROVED DATE 10-11-01'

CHECKED DATE 10-11-01'

DRAWN DATE 10-11-01'

FILE NO

Amphenol

TITLE
SMB BULKHEAD RECEPT. JACK

DRAWING NO.
KJ-SMB1351B1-3GT30G-50

ITEM NO.