PCB terminal block - FK-MPT 0,5/10-3,5 - 1891140

Please be informed that the data shown in this PDF Document is generated from our Online Catalog. Please find the complete data in the user's documentation. Our General Terms of Use for Downloads are valid (http://download.phoenixcontact.com)

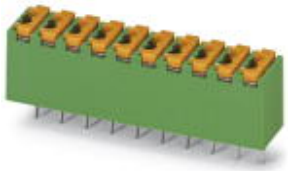

The figure shows a 10-position version of the product

PCB terminal block, Nominal current: 4 A, Nom. voltage: 250 V, Pitch: 3.5 mm, Number of positions: 10, Connection method: Spring-cage conn., Mounting: Soldering, Conductor/PCB connection direction: 90 °, Color: green

Product Features

- Available as a PCB terminal block or as a plug
- Miniature connection terminal for solid conductors
- 3.5 mm pitch
- More user friendly thanks to direct plug-in technology with release button
- Potentials can be easily looped through thanks to the double connection

Key commercial data

package_quantity	50
GTIN	4017918169664

Technical data

Dimensions

Length	7 mm
Pitch	3.5 mm
Dimension a	31.5 mm
Pin dimensions	0,4 x 0,9 mm
Hole diameter	1 mm

General

Range of articles	FK-MPT 0,5/..-V
Insulating material group	IIIa
Rated surge voltage (III/3)	2.5 kV
Rated surge voltage (III/2)	2.5 kV
Rated surge voltage (II/2)	2.5 kV
Rated voltage (III/3)	160 V
Rated voltage (III/2)	250 V
Rated voltage (II/2)	250 V
Connection in acc. with standard	EN-VDE
Nominal current I_N	4 A
Nominal cross section	0.5 mm²

PCB terminal block - FK-MPT 0,5/10-3,5 - 1891140

Technical data

General

Maximum load current	4 A (with 0.5 mm² conductor cross section)
Insulating material	PBT
Solder pin surface	Sn
Inflammability class according to UL 94	V0
Stripping length	6.5 mm
Number of positions	10

Connection data

Conductor cross section solid min.	0.12 mm²
Conductor cross section solid max.	0.5 mm²
Conductor cross section AWG/kcmil min.	26
Conductor cross section AWG/kcmil max	20
Minimum AWG according to UL/CUL	28
Maximum AWG according to UL/CUL	20

classifications

eCl@ss

eCl@ss 4.0	272607xx
eCl@ss 4.1	27141109
eCl@ss 5.0	27141190
eCl@ss 5.1	27141190
eCl@ss 6.0	27261101
eCl@ss 7.0	27440401
eCl@ss 8.0	27440401

ETIM

ETIM 3.0	EC001121
ETIM 4.0	EC002643
ETIM 5.0	EC002643

UNSPSC

UNSPSC 6.01	30211801
UNSPSC 7.0901	39121432
UNSPSC 11	34131203
UNSPSC 12.01	39121432
UNSPSC 13.2	39121432

approvals

UL Recognized / SEV / cUL Recognized / GOST / CCA / cULus Recognized /

Approval details

PCB terminal block - FK-MPT 0,5/10-3,5 - 1891140

approvals

UL Recognized

Usegroups	B	D
Nominal voltage UN	300 V	300 V
Nominal current IN	4 A	4 A
mm²/AWG/kcmil	28-20	28-20

SEV

Nominal voltage UN	160 V
Nominal current IN	3 A
mm²/AWG/kcmil	0.5

cUL Recognized

Usegroups	B	D
Nominal voltage UN	300 V	300 V
Nominal current IN	4 A	4 A
mm²/AWG/kcmil	28-20	28-20

GOST

CCA

Nominal voltage UN	160 V
Nominal current IN	3 A
mm²/AWG/kcmil	0.5

cULus Recognized

accessories

Screwdriver tools

PCB terminal block - FK-MPT 0,5/10-3,5 - 1891140

accessories

SZF 0-0,4X2,5 - 1204504



Printed circuit board housing

FK-MPT 0,5/10-IC-3,5 - 1905421



FK-MPT 0,5/10-ICV-3,5 - 1905573



Drawings

PCB terminal block - FK-MPT 0,5/10-3,5 - 1891140

Drilling diagram

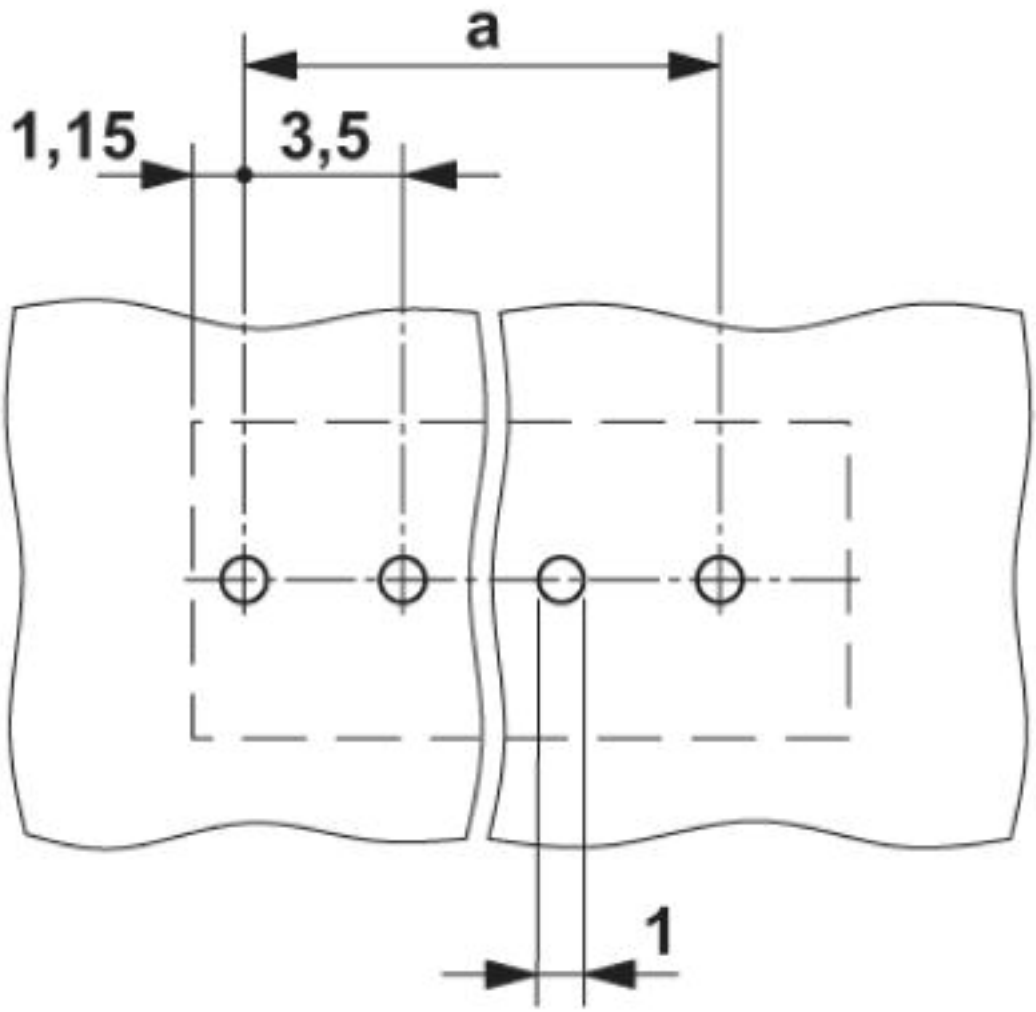

PCB terminal block - FK-MPT 0,5/10-3,5 - 1891140

Diagram

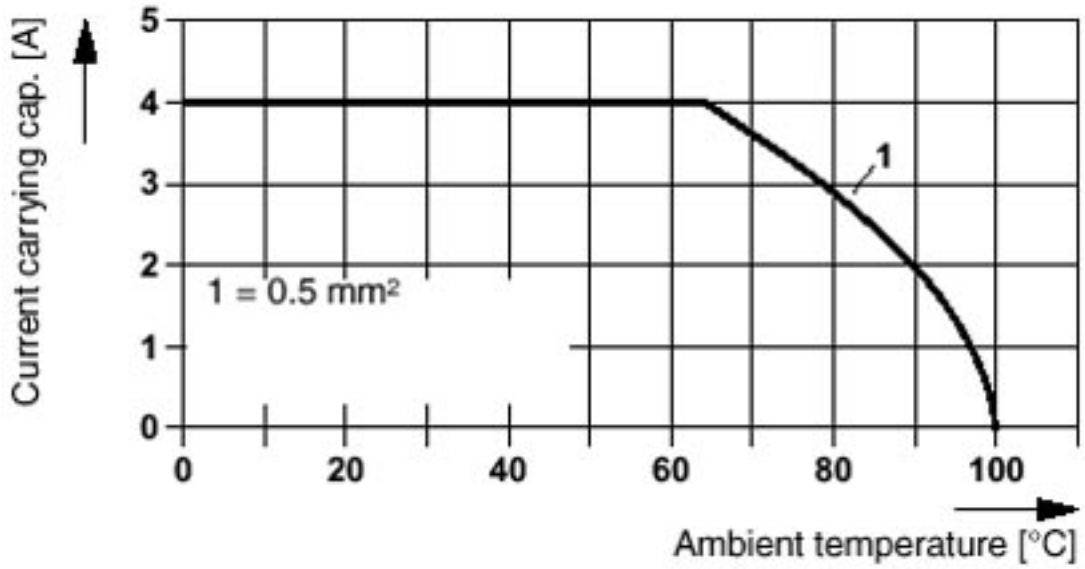

Dimensioned drawing

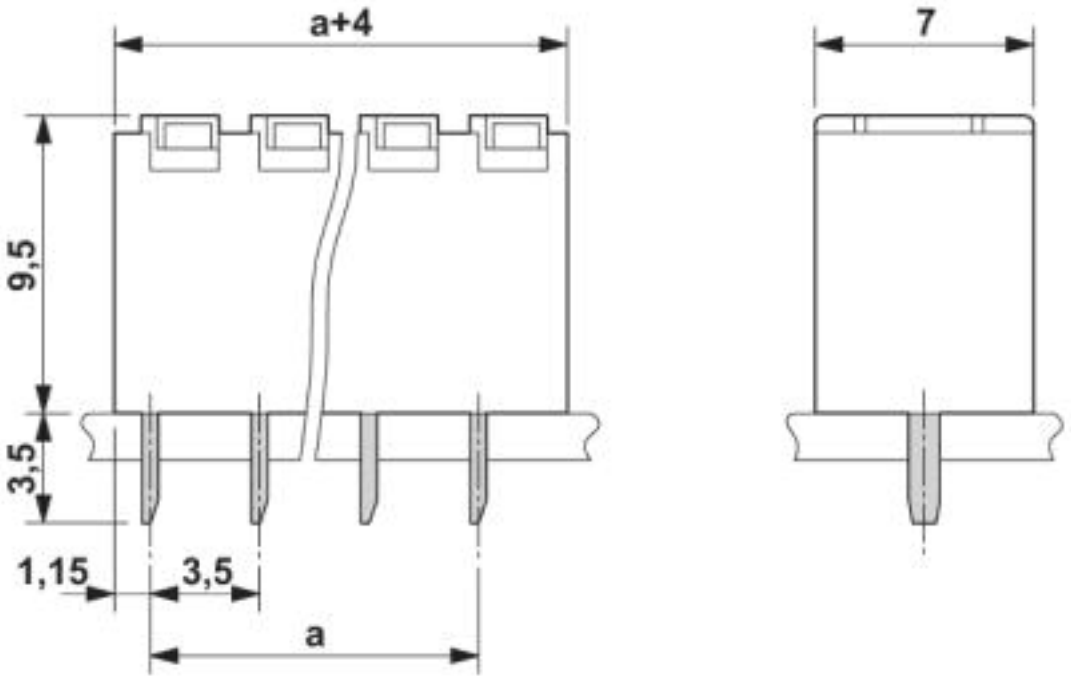

© Phoenix Contact 2013 - all rights reserved
http://www.phoenixcontact.com