PCB terminal block - PT 1,5/12-5,0-H - 1935268

Please be informed that the data shown in this PDF Document is generated from our Online Catalog. Please find the complete data in the user's documentation. Our General Terms of Use for Downloads are valid (http://download.phoenixcontact.com)



The figure shows a 10-position version of the product

PCB terminal block, Nominal current: 17.5 A, Nom. voltage: 400 V, Pitch: 5 mm, Number of positions: 12, Connection method: Screw connection, Mounting: Soldering, Conductor/PCB connection direction: 0 °, Color: green, Also possible: Connection of a 1.5 mm² conductor with ferrule, then however with reduction in rated voltage or pollution degree / surge category.

Product Features

- 5.0 mm pitch
- Large terminal block capacity thanks to rectangular clamping space
- Rugged version with high current carrying capacity
- Highly flexible conductor protection for easy, repeated connection
- Plus/minus screw

Key commercial data

package_quantity	50
GTIN	4017918917036

Technical data

Dimensions

Length	9 mm
Height	11.3 mm
Pitch	5 mm
Dimension a	55 mm
Pin dimensions	1,0 mm
Pin spacing	5 mm
Hole diameter	1.3 mm

General

Range of articles	PT 1,5/..-H
Insulating material group	I
Rated surge voltage (III/3)	4 kV
Rated surge voltage (III/2)	4 kV
Rated surge voltage (II/2)	4 kV
Rated voltage (III/3)	250 V
Rated voltage (III/2)	400 V
Rated voltage (II/2)	630 V
Connection in acc. with standard	EN-VDE

PCB terminal block - PT 1,5/12-5,0-H - 1935268

Technical data

General

Nominal current I_N	17.5 A
Nominal cross section	1.5 mm²
Maximum load current	17.5 A
Insulating material	PA
Solder pin surface	Sn
Inflammability class according to UL 94	V0
Internal cylindrical gage	A 1
Stripping length	5 mm
Number of positions	12
Screw thread	M2,6
Tightening torque, min	0.35 Nm
Tightening torque max	0.4 Nm

Connection data

Conductor cross section solid min.	0.2 mm²
Conductor cross section solid max.	2.5 mm²
Conductor cross section stranded min.	0.2 mm²
Conductor cross section stranded max.	2.5 mm²
Conductor cross section stranded, with ferrule without plastic sleeve min.	0.25 mm²
Conductor cross section stranded, with ferrule without plastic sleeve max.	1.5 mm²
Conductor cross section stranded, with ferrule with plastic sleeve min.	0.25 mm²
Conductor cross section stranded, with ferrule with plastic sleeve max.	1.5 mm²
Conductor cross section AWG/kcmil min.	26
Conductor cross section AWG/kcmil max	14
2 conductors with same cross section, solid min.	0.2 mm²
2 conductors with same cross section, solid max.	0.75 mm²
2 conductors with same cross section, stranded min.	0.2 mm²
2 conductors with same cross section, stranded max.	0.75 mm²
2 conductors with same cross section, stranded, ferrules without plastic sleeve, min.	0.25 mm²
2 conductors with same cross section, stranded, ferrules without plastic sleeve, max.	0.34 mm²
2 conductors with same cross section, stranded, TWIN ferrules with plastic sleeve, min.	0.5 mm²
2 conductors with same cross section, stranded, TWIN ferrules with plastic sleeve, max.	0.75 mm²
Minimum AWG according to UL/CUL	26
Maximum AWG according to UL/CUL	12

PCB terminal block - PT 1,5/12-5,0-H - 1935268

classifications

eCl@ss

eCl@ss 4.0	272607xx
eCl@ss 4.1	27141109
eCl@ss 5.0	27141190
eCl@ss 5.1	27141190
eCl@ss 6.0	27261101
eCl@ss 7.0	27440401
eCl@ss 8.0	27440401

ETIM

ETIM 3.0	EC001121
ETIM 4.0	EC002643
ETIM 5.0	EC002643

UNSPSC

UNSPSC 6.01	30211801
UNSPSC 7.0901	39121432
UNSPSC 11	34131203
UNSPSC 12.01	39121432
UNSPSC 13.2	39121432

approvals

UL Recognized / SEV / cUL Recognized / CCA / VDE Gutachten mit Fertigungsüberwachung / CCA / IECEE CB Scheme / GOST / GOST / cULus Recognized /

Approval details

UL Recognized

Usegroups	**B**	**D**
Nominal voltage UN	300 V	300 V
Nominal current IN	18 A	10 A
mm²/AWG/kcmil	26-12	26-12

SEV	
Nominal voltage UN	250 V
Nominal current IN	16 A
mm²/AWG/kcmil	2.5

PCB terminal block - PT 1,5/12-5,0-H - 1935268

approvals

cUL Recognized

Usegroups	B	D
Nominal voltage UN	300 V	300 V
Nominal current IN	18 A	10 A
mm²/AWG/kcmil	26-12	26-12

CCA

Nominal voltage UN	250 V
Nominal current IN	16 A
mm²/AWG/kcmil	2.5

VDE Gutachten mit Fertigungsüberwachung

Nominal voltage UN	250 V
Nominal current IN	24 A
mm²/AWG/kcmil	0.2-2.5

Nominal voltage UN	250 V
Nominal current IN	24 A
mm²/AWG/kcmil	0.2-2.5

IECEE CB Scheme

Nominal voltage UN	250 V
Nominal current IN	24 A
mm²/AWG/kcmil	0.2-2.5

GOST

PCB terminal block - PT 1,5/12-5,0-H - 1935268

approvals

cULus Recognized

accessories

Screwdriver tools

SZS 0,6X3,5 - 1205053



Labeled terminal marker

SK 5/3,8:FORTL.ZAHLEN - 0804183



Drawings

PCB terminal block - PT 1,5/12-5,0-H - 1935268

Drilling diagram

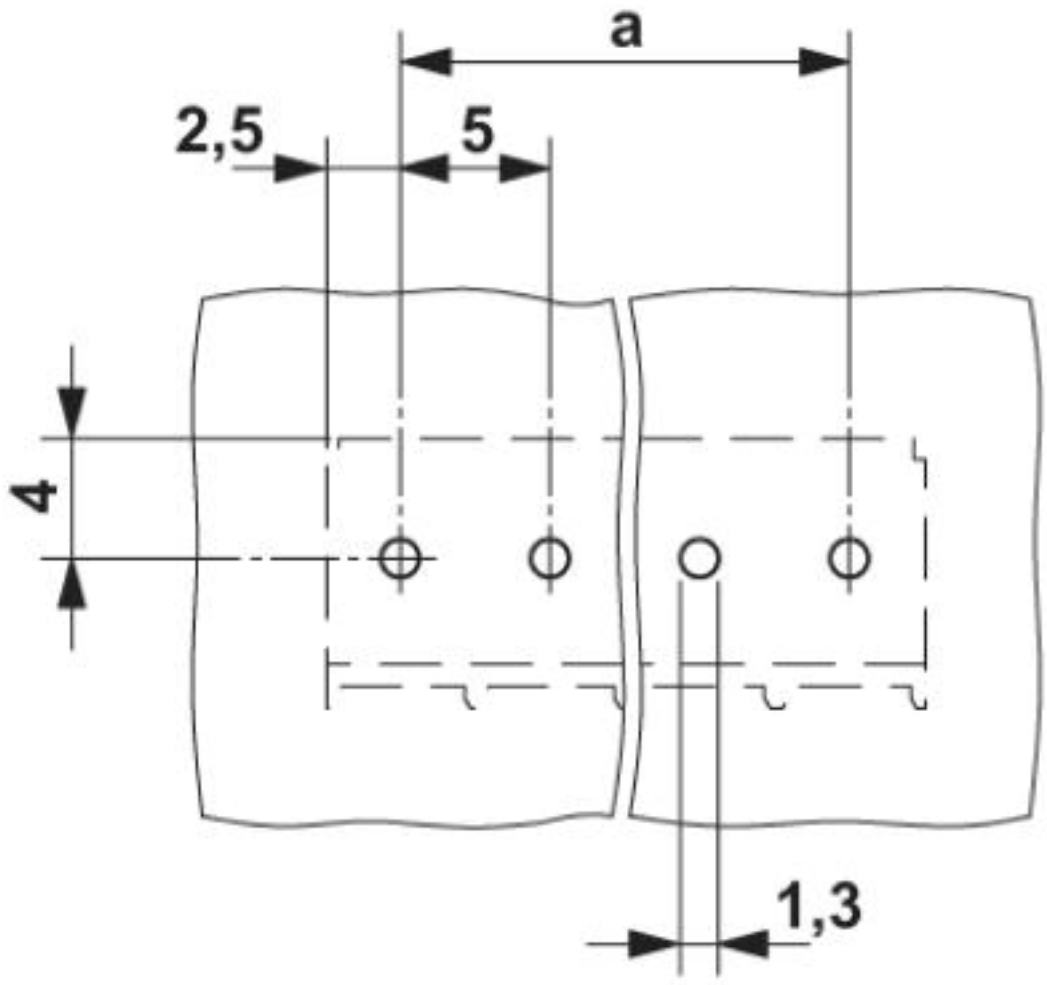

PCB terminal block - PT 1,5/12-5,0-H - 1935268

Diagram

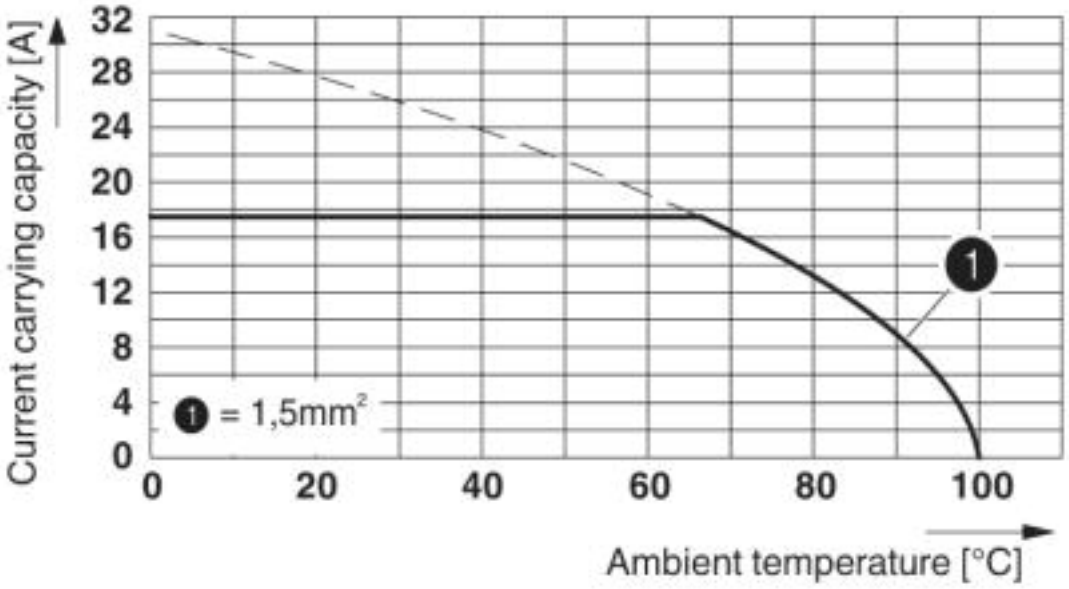

Derating diagram for 5 pins;reduction factor=1

Dimensioned drawing

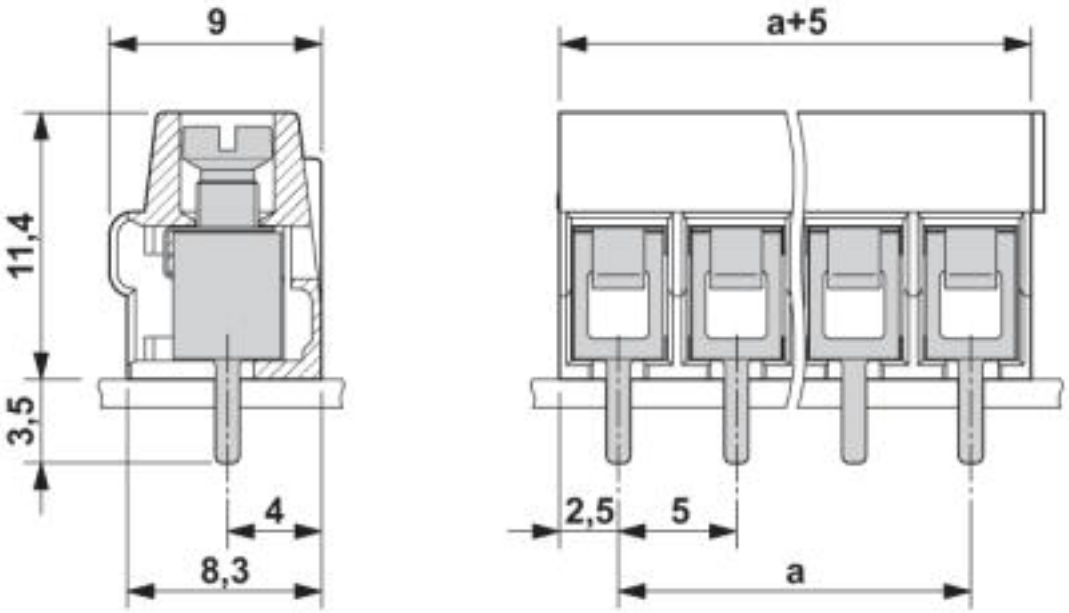

© Phoenix Contact 2013 - all rights reserved
http://www.phoenixcontact.com