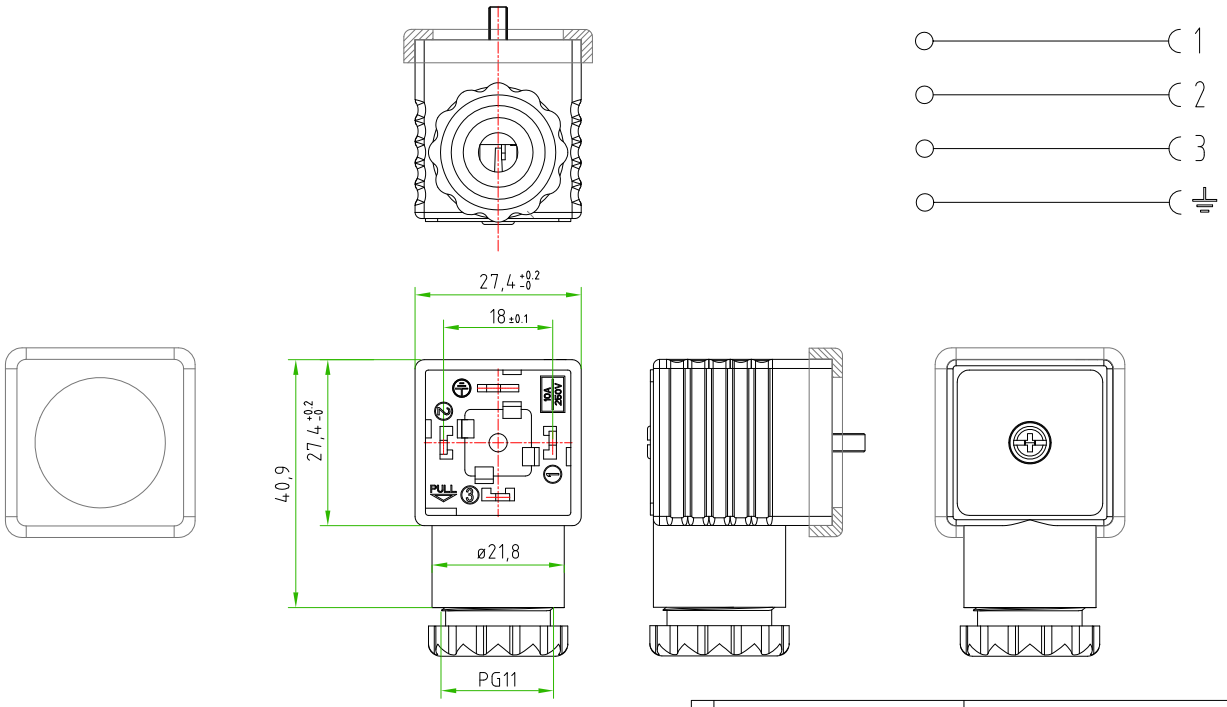

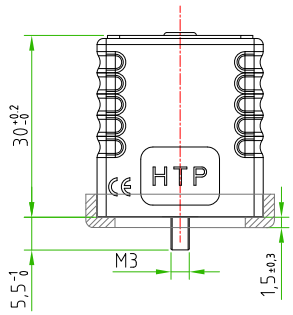

CONNECTOR FEATURES	PRODUCT TYPE	EN175301-803 FORM A FIELD ATTACHABLE.
	HOUSING MATERIAL/COLOUR	PA66 /BLACK
	PRESS-CABLE MATERIAL/COLOUR	PA66 /BLACK
	INTRENAL CORE MATERIAL/COLOUR	PA66 /BLACK
	HEIGHT HOUSING	30mm
	CONTACTS SPACING	18mm
	CONTACTS TYPE	SCREW CONTACTS(with protection plate)
	NUMBER OF POLES	3POLES+EARTH
	EARTH POSITIONING	H.12 (TURNABLE)
	CABLE EXIT	PG9/11 UNIFIED
	SUITABLE CABLE	FROM ø6mm TO ø10mm
	MAX.CONDUCTOR SIZE	1,5mm²
	PROTECTION CLASS	IP67
	CIRCUIT TYPE	WITHOUT ELECTRONIC
	RATED VOLTAGE	250V AC / 300V DC
	CONNECTOR TEMPERATURE RANGE	from -40°C to +90°C
	GASKET TYPE	PROFILED NBR
	FIXING SCREW	M3X0,5 L=32,5mm
	CONNECTOR WITH H.T.P. LOGO	

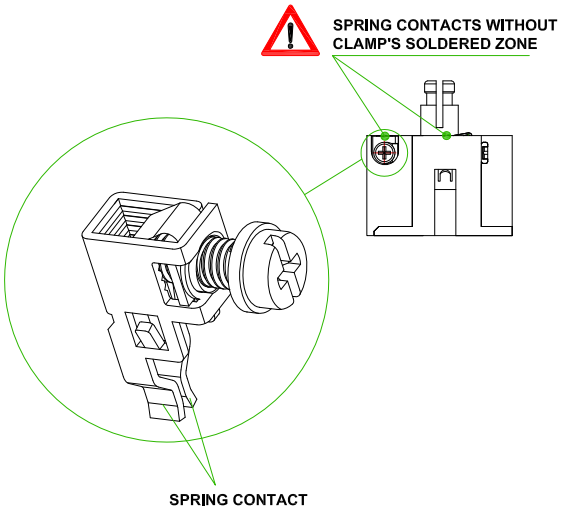

CUSTOMER APPROVAL	
SIGNATURE	DATE
PLEASE SIGN AND RETURN	

Rev.	Modify	Date	Firma	Approved

Rev.	Modify	Date	Firma	Approved

Rev.	Modify	Date	Signed	Approved

A4

Designer	SUGLIANI R.	Date	2016-07-01	Tollerance	±0,2	Units:	mm	Series	EN175301-803 (form A)	Drawing n. 1/1
Approved	CIMMINO L.	Date	2016-07-01	Scale	1:1	Size:	A4	Customer code:		

HIGH TECH PRODUCTS S.R.L.

DESCRIPTION

SQUARE CONNECTOR EN175301-803 FORM A,FIELD ATTACHABLE,3P.+PE, WITHOUT ELECTRONIC,250V AC/ 300V DC,BLACK HOUSING,PG9/11 unified. CONNECTOR WITH H.T.P. LOGO.

H.T.P.PART NUMBER

G1NU3000

H.T.P. High Tech Products S.R.L. Via Lesina,45 -24030- Brembate di Sopra (Bg) - ITALY Phone:+39.035692509 Fax:+39.035203291 E-mail: info@webhtp.eu Web: http://www.webhtp.eu/

ALL RIGHTS ARE RESERVED.