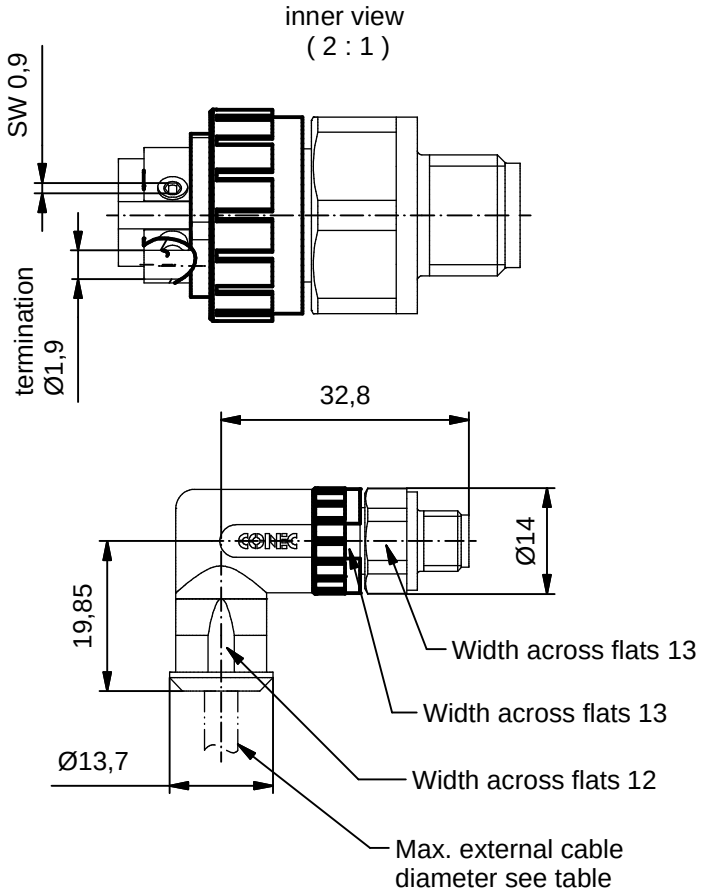

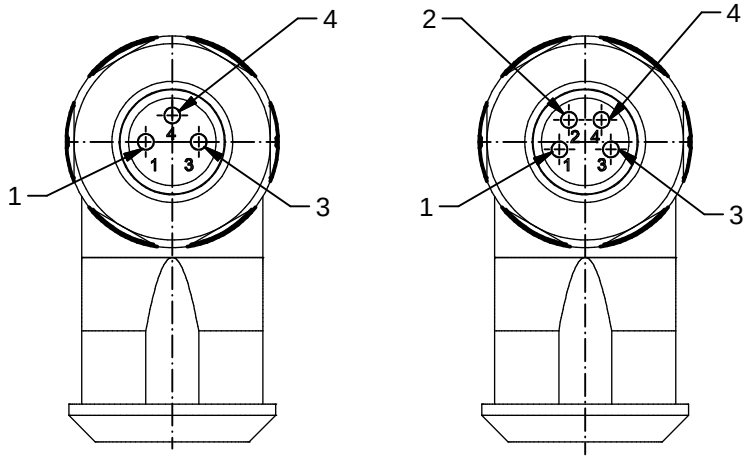

3 pos

4 pos

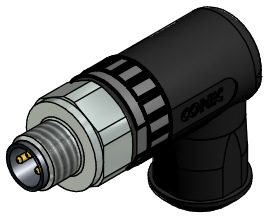

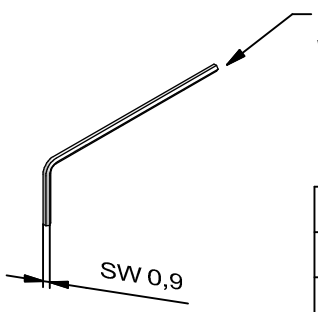

Technical specification:

Rated voltage: IEC 61076-2-104	3pos 60 V	4pos 30 V
Current rating: IEC 61076-2-104	4 A at 40℃ with 0,5mm²	
Insulation resistance: IEC 60512	>= 100 MΩ	
Pollution degree: IEC 60664-1	3/2	
Degree of protection: IEC 60529	IP 67, in mated condition	
Temperature range: IEC 60664-1	-30℃ ... +85℃	
Mating cycles: IEC 60512-9a	>= 100	
Wire cross section:	AWG 20 / max 0,5mm²	

Materials:

Contact:	CuZn
Contact plating:	Au over Ni in mating area
Contact carrier:	PA6, UL 94
Cable sealing:	NBR
O-Ring:	Silicone / NBR
Coupling nut:	CuZn, Ni
Housing:	PA6 GF, UL 94

Installation specification for locking screw to counter connector:

Recommended torque:	0,4 Nm
Conec installation tool:	Torque wrench: 36-000200 Insert across flats 13: 36-000220

Part no:	Description:	Pos:	Cable-Ø:
42-00025	SAL - 8 - RSWC3-S	3	4 - 5,5mm
42-00027	SAL - 8 - RSWC4-S	4	4 - 5,5mm

DO NOT ALTER CAD DRAWING BY HAND

Directive 2002/95/EC RoHS compliant

Index: b 06.12.11 K.H. Ä4175
font size adapted; dimension termination adapted; Installation specif. adapted

dim. in mm

	date	name
drawn	08.08.11	Strakerjahn
appd.	16.09.11	Hüther

title: Male connector M8x1, field attachable , angled, screw termination

tolerance of cable:

general tolerance:

0	± 0,50mm
0,0	± 0,25mm
0,00	± 0,10mm

dwg no: 42K1A320

part no: see table

THIS DRAWING MAY NOT BE COPIED OR REPRODUCED IN ANY WAY, AND MAY NOT BE PASSED ON TO A THIRD PARTY WITHOUT WRITTEN PERMISSION. OWNERSHIP AND COPYRIGHT OF CONEC GmbH