Circular Plastic Connectors, Size 1

CPC Connectors, Series 1 for Cable or Panel Mount
(Accepts Type III+, High-Current Power, Type II and Subminiature Coax Contacts)



Listed part numbers are for connectors only; **contacts must be ordered separately.**

Material

Housing—Thermoplastic, 94V-0 rated, black

Related Product Data

Contacts—Pages 16-22
Contact Arrangement—Page 23
Component Dimensions—Page 24*
Accessories—Pages 37-41, 51-53
Performance Characteristics—Page 6
Application Tooling—Pages 75-78
Technical Documents—Page 79

Replacement Coupling Rings

Shell Size	Part No.
11	213811-1
13	213813-1
17	213810-1
23	213812-1

Keying

Molded-in keying in two configurations:

A—Standard Configuration: 5 Keys



B—Optional Configuration: 4 Keys to prevent mismating of standard and reverse sex.



Square Flange Receptacle

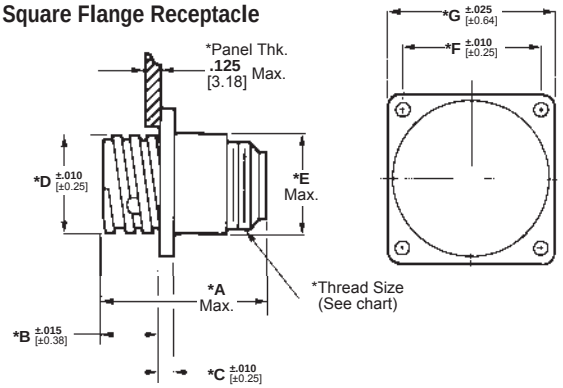

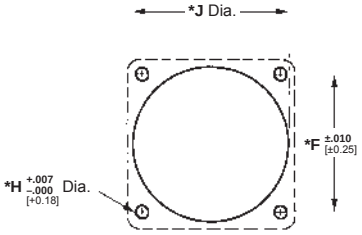

Panel Cutout

Free-Hanging Receptacle

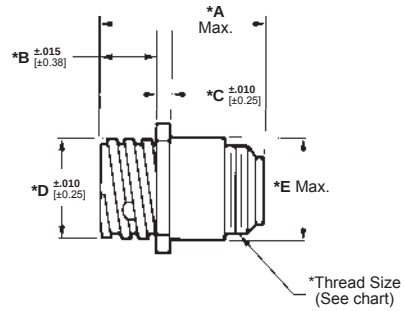

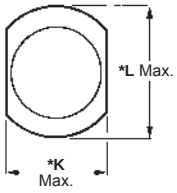

***Note:**
See page 24 for callout dimensions

Plug

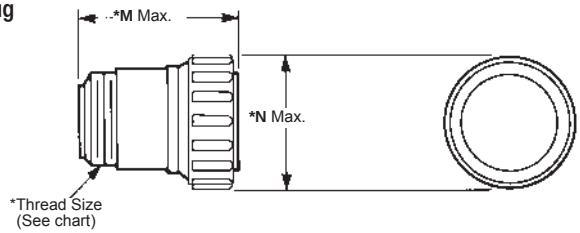

Standard Sex Connectors (Receptacles accept pin contacts, Plugs accept socket contacts)

Arrangement: Shell Size	Arrangement: No. of Positions	Keying	Square Flange Receptacle: With Threaded Inserts[1]	Square Flange Receptacle: With Mounting Holes	Free-Hanging Receptacle	Plug
11	4	A	208130-1	206061-1	206153-1	206060-1
13	9	A	208131-1	206705-1	206705-2	206708-1
17	16	A	206036-8	206036-1	206036-3	206037-1
		B	—	213862-1	—	213849-1
23	24	A	211839-1	206838-1	206838-2	206837-1
		B	—	213866-1	—	213851-1
23	37	A	787610-1	206151-1	206151-2	206150-1
		B	—	213860-1	—	213848-1

[1]Four 4-40 threaded inserts per receptacle.

Reverse Sex Connectors (Receptacles accept socket contacts, Plugs accept pin contacts)

Arrangement: Shell Size	Arrangement: No. of Positions	Keying	Square Flange Receptacle: With Threaded Inserts[1]	Square Flange Receptacle: With Mounting Holes	Free-Hanging Receptacle	Plug
11	4	A	211102-1	206430-1	206430-2	206429-1
17	14	A	211103-1	206043-1	206043-3	206044-1
		B	—	796437-2	—	796449-1
23	37	A	206306-5	206306-1	206306-2	206305-1
		B	—	213864-1	—	213850-1

[1]Four 4-40 threaded inserts per receptacle.
Key Style “A” is the Standard 5 Locating Key arrangement. Key Style “B” is the 4 Locating Key arrangement.

Catalog 82021
Revised 7-06

www.tycoelectronics.com

Dimensions are in inches and millimeters unless otherwise specified. Values in brackets are metric equivalents.

Dimensions are shown for reference purposes only. Specifications subject to change.

USA: 1-800-522-6752
Canada: 1-905-470-4425
Mexico: 52-55-1106-0800
C. America: 57-1-254-4444

South America: 55-11-2103-6000
Hong Kong: 852-2735-1628
Japan: 81-44-844-8013
UK: 44-208-420-8341

Circular Plastic Connectors, Series 1, VDE Tested

CPC Connectors, Series 1, for Cable or Panel Mount (Accepts Type III+, High-Current Power, Type II and Subminiature Coax Contacts)



- Designed to meet requirements of VDE as shown in DIN Specification 57627
- Recognized under the Component Program of Underwriters Laboratories Inc. for 600 VAC and 600 VDC service, File No. E28476
- Certified by Canadian Standards Association, File No. LR 7189

Listed part numbers are for connectors only; **contacts must be ordered separately.**

Material

Housing—Thermoplastic, 94V-0 rated, black

Related Product Data

Contacts—Pages 16-22
Contact Arrangement—Page 23
Component Dimensions—Page 24*
Accessories—Pages 37-41, 51-53
Performance Characteristics—Page 6
Application Tooling—Pages 75-78
Technical Documents—Page 79

Replacement Coupling Rings

Shell Size	Part No.
13	213813-1
17	213810-1
23	213812-1

Keying

A—Standard Configuration: 5 Keys
B—Optional Configuration: 4 Keys

Square Flange Receptacle

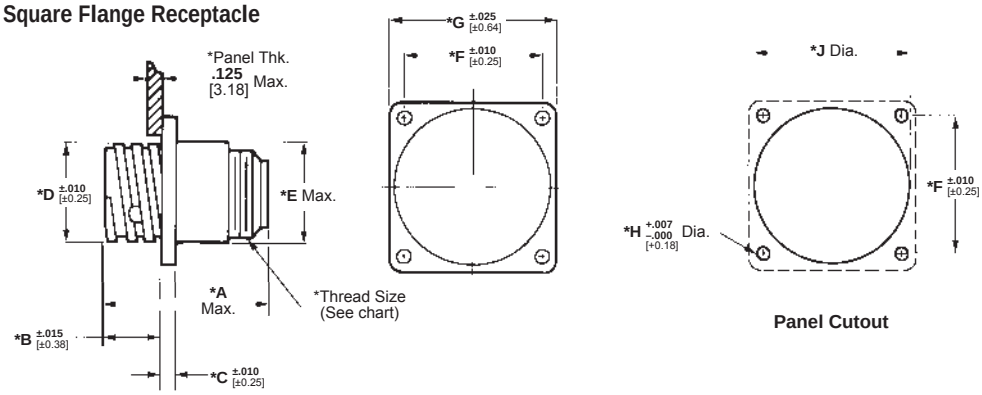

Free-Hanging Receptacle

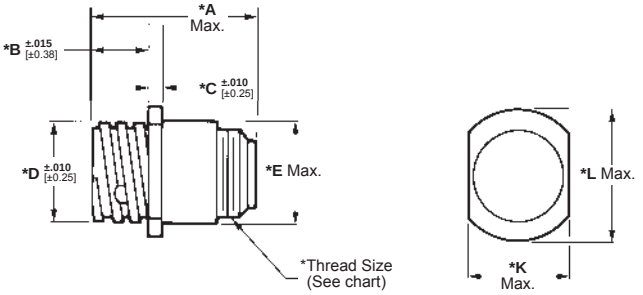

***Note:**
See page 24 for callout dimensions

Plug

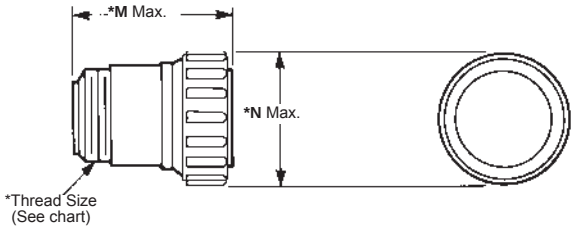

Standard Sex Connectors (Receptacles accept pin contacts, Plugs accept socket contacts)

Arrangement			Square Flange Receptacle		
Shell Size	No. of Positions	Keying	With Threaded Inserts[1]	With Mounting Holes	Plug
13-7		A	211401-4	211401-1	211399-1
17-9		A	211767-2	211767-1	211766-1
23-19		A	211771-2	211771-1	211770-2
		B	—	213870-1	213853-1

[1]Four 4-40 threaded inserts per receptacle.

Reverse Sex Connectors (Receptacles accept socket contacts, Plugs accept pin contacts)

Arrangement			Square Flange Receptacle			
Shell Size	No. of Positions	Keying	With Threaded Inserts[1]	With Mounting Holes	Free-Hanging Receptacle	Plug
13-7		A	211398-4	211398-1	211398-2	211400-1
17-9		A	—	211769-1	211769-3	211768-1
		B	—	796439-2	—	796450-1
23-19		A	—	211773-1	—	211772-1
		B	—	213868-1	—	213852-1

[1]Four 4-40 threaded inserts per receptacle.
Key Style “A” is the Standard 5 Locating Key arrangement. Key Style “B” is the 4 Locating Key arrangement.

Catalog 82021
Revised 7-06

www.tycoelectronics.com

Dimensions are in inches and millimeters unless otherwise specified. Values in brackets are metric equivalents.

Dimensions are shown for reference purposes only. Specifications subject to change.

USA: 1-800-522-6752
Canada: 1-905-470-4425
Mexico: 52-55-1106-0800
C. America: 57-1-254-4444

South America: 55-11-2103-6000
Hong Kong: 852-2735-1628
Japan: 81-44-844-8013
UK: 44-208-420-8341

Circular Plastic Connectors, Series 1

Square Flange Receptacles, Printed Circuit Board Mount

with .025 [0.64] sq. solder tails



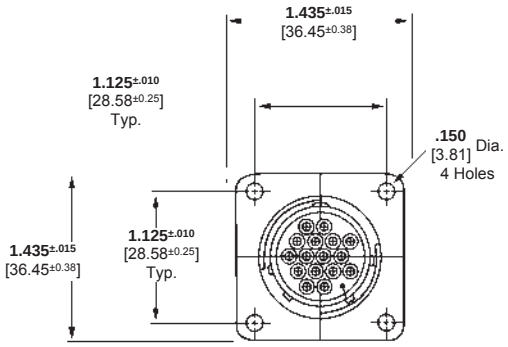

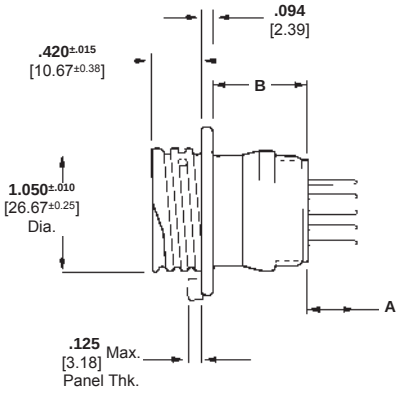

Material and Finish

Housing—Thermoplastic, 94V-0 rated, black

Contacts—
A—Duplex plated gold flash on entire contact with .000030 [0.00076] min. gold on contact engagement area, tin on the termination area
C—Plated tin on the entire contact, tin on the termination area

Related Product Data

Contact Arrangement—Page 23
Performance Characteristics—Page 6
Technical Documents—Page 79

Keying

Molded-in keying in two configurations:

A—Standard Configuration: 5 Keys



B—Optional Configuration: 4 Keys to prevent mismating of standard and reverse sex.



Other Available Posted Contacts

Tyco Electronics can make available contacts with various solder tail lengths for loading into the standard or reverse sex, square flange receptacles for applications requiring custom solder tail lengths.

Standard Sex (Posted Pin Contacts)

Arrangement No.	Receptacle Assemblies		Keying Style	Dimensions		Contact Finish Code	Peripheral Seal
	Mounting Holes	4-40 Threaded Inserts		A	B		
11-4	—	207825-9	A	**.119** 3.02	**.816** 20.73	A	N
13-7	—	1-796433-1	A	**.220** 5.59	**.816** 20.73	A	N
13-9	208223-9	—	A	**.220** 5.59	**.816** 20.73	A	N
	—	1-208223-0	A	**.220** 5.59	**.816** 20.73	A	N
17-16	—	1-207303-4	A	**.220** 5.59	**.816** 20.73	A / C	N
	1-207303-5	—					
	1-207303-3	—	A	**.220** 5.59	**.816** 20.73	A	N
	213855-4	213855-3	B				
23-19	213782-4	—	A	**.429** 10.90	**.679** 17.24	A	N
	213859-2	—	B	**.618** 15.70	**.674** 17.12	A	N
23-24	—	213588-2	A	**.220** 5.59	**.654** 16.61	C	N
	213798-3	—	A	**.618** 15.70	**.679** 17.24	A	N
	213780-2	—	A	**.220** 5.59	**.536** 13.61	A	N
	213857-2	—	B	**.429** 10.90	**.679** 17.24	A	N
23-37	1-206934-1	—	A	**.220** 5.59	**.654** 16.61	A	N
	206934-5	—	A	**.119** 3.02	**.654** 16.61	A	N
	—	1-206934-7					Y
	208132-2	—	A	**.429** 10.90	**.654** 16.61	C	N
	1-206934-8	—	A			A	
	213854-3	—	B			A	
	1-206934-9	—	A	**.618** 15.70	**.654** 16.61	A	N

Note: Posts are .017 [0.43] offset from centerline of contacts. All posts must be oriented in the same plane for proper contact/post location.

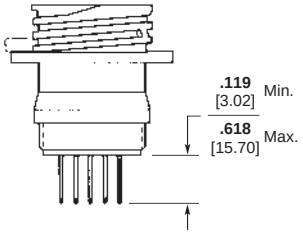

Catalog 82021
Revised 7-06

www.tycoelectronics.com

Dimensions are in inches and millimeters unless otherwise specified. Values in brackets are metric equivalents.

Dimensions are shown for reference purposes only. Specifications subject to change.

USA: 1-800-522-6752
Canada: 1-905-470-4425
Mexico: 52-55-1106-0800
C. America: 57-1-254-4444

South America: 55-11-2103-6000
Hong Kong: 852-2735-1628
Japan: 81-44-844-8013
UK: 44-208-420-8341

Circular Plastic Connectors, Series 1 (Continued)

Square Flange Receptacles, Printed Circuit Board Mount

with .025 [0.64] sq. solder tails



Material and Finish

Housing—Thermoplastic, 94V-0 rated, black

Contacts—
A—Duplex plated gold flash on entire contact with .000030 [0.00076] min. gold on contact engagement area, tin on the termination area
C—Plated tin on the entire contact, tin on the termination area

Related Product Data

Contact Arrangement—Page 23
Performance Characteristics—Page 6
Technical Documents—Page 79
Keying—Page 12

Special CPC Connectors, Square Flange Receptacles, Printed Circuit Board Mount With Round Posted Contacts (Size 16), Contact Arrangement 17-16



Material and Finish

Housing—Thermoplastic, 94V-0 rated, heat-stabilized, fire-resistant, self-extinguishing, black
Contacts—Brass
Plating—
Connector Part No. 207292-1—Plated tin over .000050 [0.00127] min. nickel on entire contact
Connector Part No. 207292-2—Plated .000030 [0.00076] min. gold over .000050 [0.00127] min. nickel on entire contact

Notes: 1. Connector can be used for pressure bulkhead feed-thru (sealed) applications.
2. Receptacle is **Standard Sex**, supplied preloaded with 16 special round posted pin contacts, .030 [0.76] diameter.

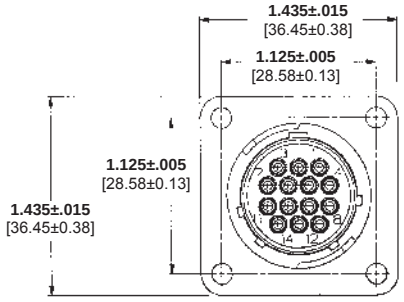

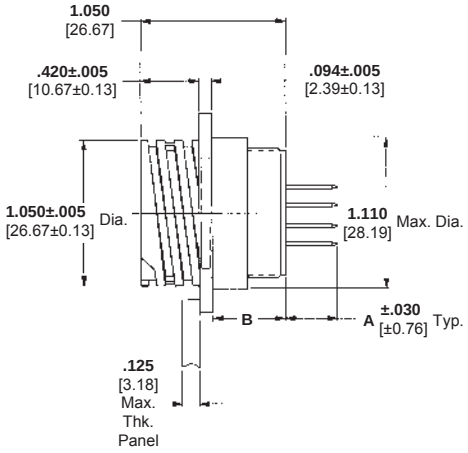

Reverse Sex (Posted Socket Contacts)

Arrangement No.	Receptacle Assemblies		Keying Style	Dimensions		Contact Finish Code	Peripheral Seal
	Mounting Holes	4-40 Threaded Inserts		A	B		
11-4	208283-4	—	A	**.159** 4.04	**.536** 13.61	A	N
	1-788130-1	—	A	**.704** 17.88	**.541** 13.74	C	N
17-9	1-213826-1	—	A	**.220** 5.59	**.536** 13.61	C	Y
17-14	213729-9	213729-6	A	**.368** 9.35	**.536** 13.61	A	N
	1-213825-7	—	A	**.220** 5.59	**.536** 13.61	C	Y
	—	213729-8	A	**.159** 4.04	**.536** 13.61	C	N
23-19	213858-3	—	B	**.645** 16.38	**.394** 10.00	A	N
	213781-9	—	A	**.557** 14.15	**.374** 9.50	C	N
	213827-8	—	A	**.368** 9.35	**.374** 9.50	C	Y
23-37	2-208224-1	—	A	**.557** 14.15	**.374** 9.50	A	N
	213856-4	—	B				
	1-208224-2	—	A	**.368** 9.35	**.374** 9.50	C	N
	1-213828-6	—	A	**.368** 9.35	**.374** 9.50	C	Y
	207890-2	—	A	**.159** 4.04	**.374** 9.50	A	N

Note: Posts are .017 [0.43] offset from centerline of contacts. All posts must be oriented in the same plane for proper contact/post location.

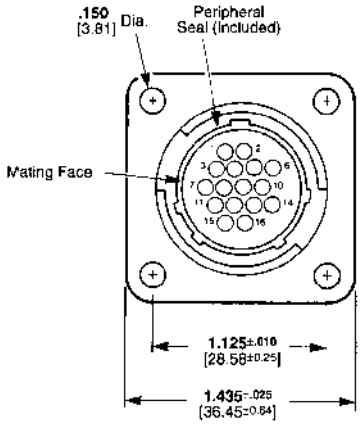

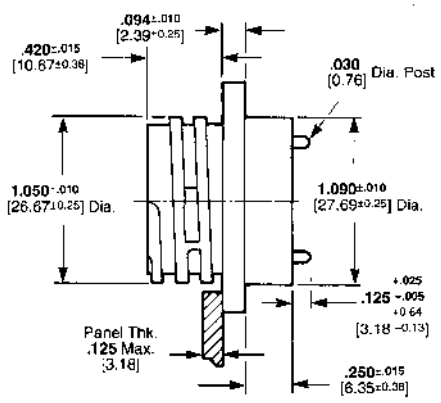

Catalog 82021
Revised 7-06

www.tycoelectronics.com

Dimensions are in inches and millimeters unless otherwise specified. Values in brackets are metric equivalents.

Dimensions are shown for reference purposes only. Specifications subject to change.

USA: 1-800-522-6752
Canada: 1-905-470-4425
Mexico: 52-55-1106-0800
C. America: 57-1-254-4444

South America: 55-11-2103-6000
Hong Kong: 852-2735-1628
Japan: 81-44-844-8013
UK: 44-208-420-8341

Circular Plastic Connectors, Series 1 (Continued)

Special CPC Connectors, Square Flange Receptacles, With Solder Type Contacts (Size 16), Contact Arrangement 17-16



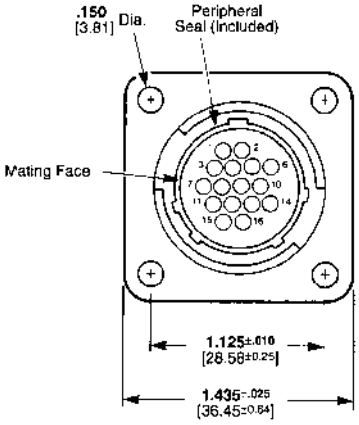

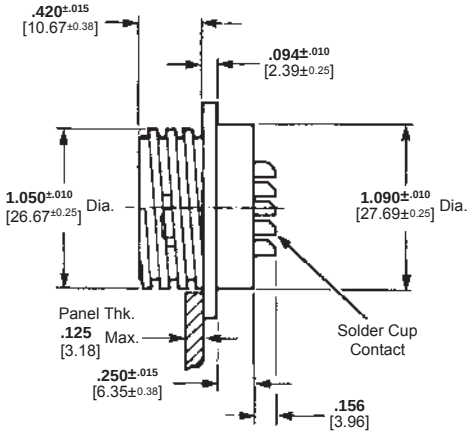

Material and Finish

Housing—Thermoplastic, 94V-0 rated, heat-stabilized, fire-resistant, self-extinguishing, black

Contacts—Brass

Plating—

Connector Part No. 206404-1—Plated .000030 [0.00076] min. gold over .000030 [0.00076] min. nickel on entire contact

Connector Part No. 206404-2—Plated tin over .000100 [0.00254] min. copper on entire contact

Notes: 1. Connector can be used for pressure bulkhead feed-thru (sealed) applications.
2. Receptacle is standard sex, supplied preloaded with 16 special solder cup pin contacts.

Special CPC Connectors, Feed-Thru

Pressure Rating up to 30 psi



Material and Finish

Housing—Thermoplastic, 94V-0 rated, black

Contacts—Copper alloy, gold over nickel plated

Receptacle, Feed-Thru

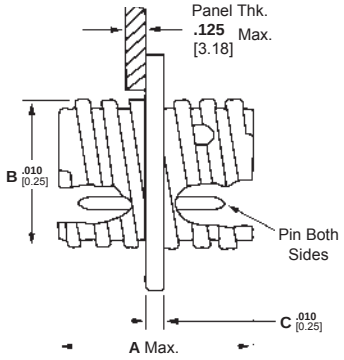

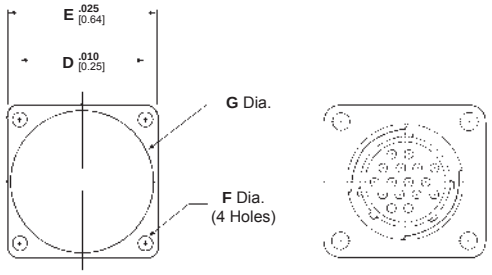

Panel Cutout

Plug

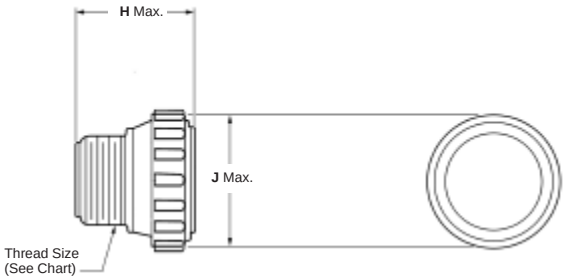

Part Numbers

Arrangement	Standard Numbering Plug	Reverse Numbering Plug	Feed-Thru Receptacle
11-4	206060-1	206516-1	206518-2
17-16	206037-1	206554-1	206552-1

Dimensions

Arrangement	Dimensions									Thread Size
	A	B	C	D	E	F	G	H	J	
11-4	**1.209** 30.71	**.687** 17.45	**.094** 2.39	**.844** 21.44	**1.125** 28.58	**.125** 3.18	**.840** 21.34	**1.080** 27.43	**.975** 24.77	5/8-24 UNEF-2A
17-16	**1.209** 30.71	**1.050** 26.67	**.094** 2.39	**1.125** 28.58	**1.435** 36.45	**.150** 3.81	**1.210** 30.73	**1.080** 27.43	**1.349** 34.26	15/16-20 UNEF-2A

Note: Feed-Thru Receptacles are **fully loaded** with Size 16, feed-thru pin contacts. Order Size 16 crimp, snap-in socket contacts for plugs separately.

Catalog 82021
Revised 7-06

www.tycoelectronics.com

Dimensions are in inches and millimeters unless otherwise specified. Values in brackets are metric equivalents.

Dimensions are shown for reference purposes only. Specifications subject to change.

USA: 1-800-522-6752
Canada: 1-905-470-4425
Mexico: 52-55-1106-0800
C. America: 57-1-254-4444

South America: 55-11-2103-6000
Hong Kong: 852-2735-1628
Japan: 81-44-844-8013
UK: 44-208-420-8341

Circular Plastic Connectors, Series 1 (Continued)

Square Flange Receptacles, Right-Angle, Posted

with .025 [0.64] sq. solder tails



Material and Finish

Housing—Thermoplastic, 94V-0 rated, black

Location Wafer—Phenolic, black

Contact Posts—.000100 [0.00254] min. tin over .000100 [0.00254] min. copper

Contact Body—

A—.000100 [0.00254] min. tin over .000050 [0.00127] min. nickel

B—.000030 [0.000762] min. gold for a length of .200 [5.08] min. from mating end, with remainder gold flash, both over .000050 [0.00127] min. nickel

Related Product Data

Contact Arrangements—Page 23

Component Dimensions—Page 24*

Performance Characteristics—Page 6

Keying—Standard Configuration: 5 Keys

Technical Documents—Page 79

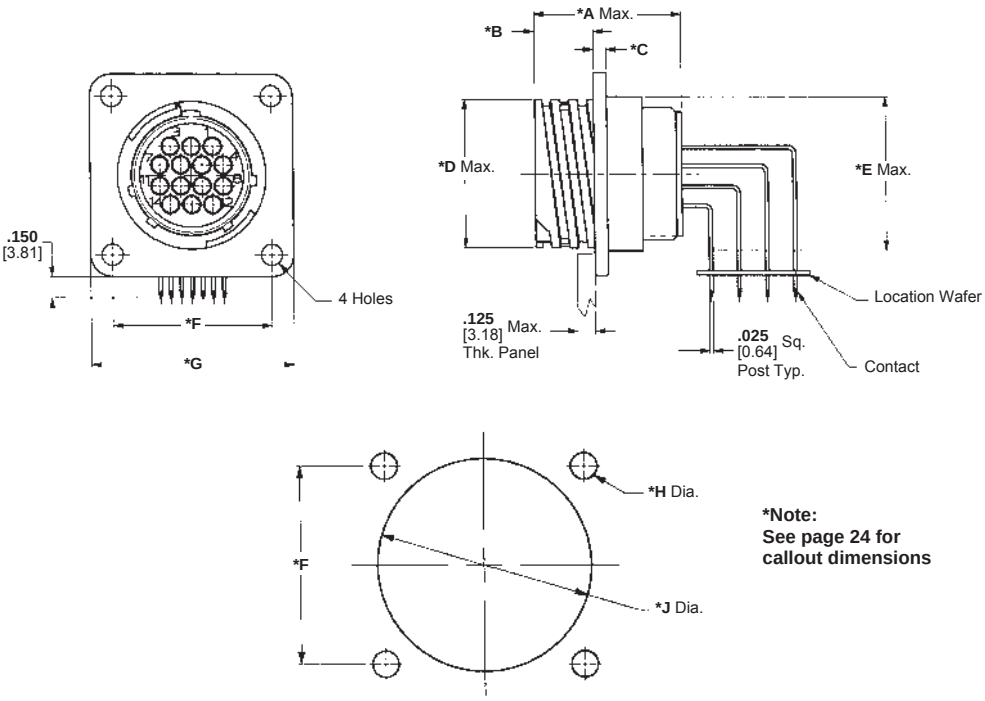

Panel Cutout

***Note:**
See page 24 for callout dimensions

Standard Sex (Posted Pin Contacts)

Arrangement No.	Receptacle Assemblies		Contact Body Finish Code	Mating Plug Part No.
	Mounting Holes	4-40 Threaded Inserts		
11-4	1-796403-1	1-796403-2	B	206060-1
13-7	1-796435-1	1-796435-2	B	211399-1
13-9	1-796375-1	1-796375-2	B	206708-1
17-9	1-796497-1	—	B	211766-1
17-16	1-796404-1	—	B	206037-1
23-19	1-796405-1	—	B	211770-2
23-24	1-796387-1	—	A	206837-1
	1-796387-2	—	B	
23-37	1-796406-1	—	B	206150-1

Reverse Sex (Posted Socket Contacts)

Arrangement No.	Receptacle Assemblies		Contact Body Finish Code	Mating Plug Part No.
	Mounting Holes	4-40 Threaded Inserts		
11-4	1-796407-1	—	B	206429-1
13-7	1-796500-1	—	B	211400-1
17-9	1-796501-1	—	B	211768-1
17-14 (shown)	796348-3	—	A	206044-1
	796348-2	—	B	
23-19	1-796502-1	—	B	211772-1
23-37	1-796409-1	—	B	206305-1

Catalog 82021
Revised 7-06

www.tycoelectronics.com

Dimensions are in inches and millimeters unless otherwise specified. Values in brackets are metric equivalents.

Dimensions are shown for reference purposes only. Specifications subject to change.

USA: 1-800-522-6752
Canada: 1-905-470-4425
Mexico: 52-55-1106-0800
C. America: 57-1-254-4444

South America: 55-11-2103-6000
Hong Kong: 852-2735-1628
Japan: 81-44-844-8013
UK: 44-208-420-8341

Signal Contacts

Type III+, Crimp, Snap-In

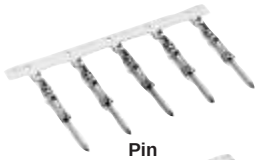

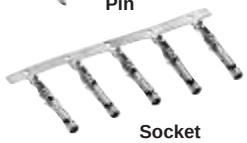

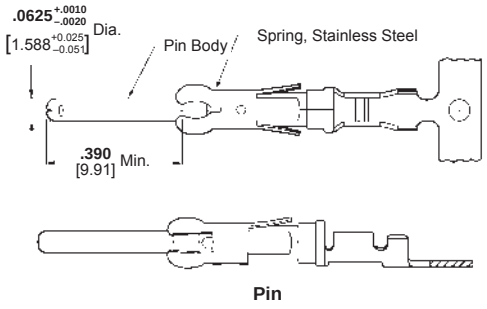

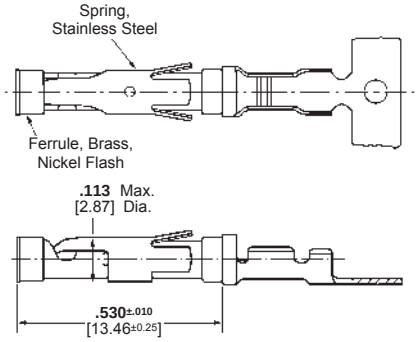

Material and Finish — See chart.
Contact Body—Brass or phosphor bronze
Retention Spring—Stainless steel

Application Tooling—Pages 75-78
Technical Documents
114-10004 Application Specification
108-10042 Product Specification

Contact Size 16—Pin Diameter .062 [1.57] (Test Current, 13 Ampere)‡

‡Single contact, free-air test current is not to be construed as contact rating current. Use only for testing. Refer to contact current carrying capability information on page 8.

Wire Size Range AWG	Wire Size Range mm²	Ins. Dia. Range	Contact Finish	Strip Form Contact No. Pin	Strip Form Contact No. Socket	Loose Piece Contact No. Pin	Loose Piece Contact No. Socket	Tooling Part No. Loose Piece Hand Tool	Tooling Part No. Strip Form Applicators
30-28	0.05-0.09	**.015-.030** 0.38-0.76	Gold/Nickel[2]	788085-3	788088-2	—	—	90716-1	567867-1*** or 567947-1*** or 680602-□***
			Sel. Gold/Nickel[3]	788085-1	788088-1	788085-4	788088-3		
30-26	0.05-0.15	**.040-.060**[1] 1.02-1.52	Bright Tin	1-66425-2	1-66424-1	—	—	91515-1[6]	466598-□***
			Gold/Nickel[2]	66425-7	66424-7	66429-3	66428-3		
			Sel. Gold/Nickel[3]	66425-8	66424-8	66429-4	66428-4		
		.014-.030[1] 0.36-0.76	Gold/Nickel[2]	66393-7	66394-7	—	—	90225-2[6]	466585-3***
			Sel. Gold/Nickel[3]	66393-8	66394-8	66406-4	66405-4		
26-24	0.12-0.2	**.035-.055**[1] 0.89-1.40	Bright Tin	1-66106-5	1-66108-5	1-66107-1	1-66109-7	91515-1[6] or 58495-1*	466321-□*** or 466908-2***
			Gold/Nickel[2]	66106-7	66108-7	66107-3	66109-3		
			Sel. Gold/Nickel[3]	66106-8	66108-8	66107-4	66109-4		
			Sel. Gold/Nickel[4]	—	66108-1	—	66109-1		
24-20	0.2-0.6	**.040-.080**[1] 1.02-2.03	Bright Tin	2-66102-5	3-66104-0	1-66103-8	1-66105-9	91515-1[6] or 58495-1*	466323-□*** or 466907-2***
			Gold/Nickel[2]	66102-8	66104-8	66103-3	66105-3		
			Sel. Gold/Nickel[3]	66102-9	66104-9	66103-4	66105-4		
				2-66102-2	2-66104-3	1-66103-2	1-66105-3		
			Sel. Gold/Nickel[4]	—	66104-1	—	66105-1		
		.060-.120[5] 1.52-3.05	Bright Tin	1-66564-2	1-66563-1	66566-7	66565-7	91542-1[6]	466383-4*** or 466979-1*** or 567363-□***
			Sel. Gold/Nickel[3]	66564-8	66563-8	66566-4	66565-4		
		.080-.100[1] 2.03-2.54	Bright Tin	1-66332-4	1-66331-4	1-66400-0	1-66399-0	91523-1[6] or 90225-2[6]	466324-□*** or 466942-1***
			Gold/Nickel[2]	66332-7	66331-7	66400-3	66399-3		
			Sel. Gold/Nickel[3]	66332-8	66331-8	66400-4	66399-4		
			Sel. Gold/Nickel[4]	—	66331-2	—	66399-2		
18-16	0.8-1.4	**.080-.100**[1] 2.03-2.54	Bright Tin	1-66098-9[S]	1-66100-9	1-66099-5	1-66101-9	91505-1[6] or 91523-1[6] or 58495-1*	466325-□*** or 466906-1***
				1-66098-8					
			Gold/Nickel[2]	66098-8	66100-8	66099-3	66101-3		
			Sel. Gold/Nickel[3]	66098-9	66100-9	66099-4	66101-4		
			Sel. Gold/Nickel[4]	66098-6	—	66099-1	—		
18-14	0.8-2.0	**.080-.100**[1] 2.03-2.54	Bright Tin	1-66359-4	1-66358-6	1-66361-2	1-66360-2	91519-1[6]	466326-□*** or 466923-2***
				1-66359-5	1-66358-8	66361-7	66360-7		
			Gold/Nickel[2]	66359-9	66358-9	66361-3	66360-3		
			Sel. Gold/Nickel[3]	1-66359-0	1-66358-0	66361-4	66360-4		
				1-66359-2	1-66358-3	66361-8	66360-8		
			Sel. Gold/Nickel[4]	—	66358-1	—	66360-1		
		.110-.150[5] 2.79-3.81	Bright Tin	66597-8	66598-9	66602-8	66601-9	91521-1[6]	466958-1*** or 567364-□***
					1-66598-0				
			Sel. Gold/Nickel[3]	66597-2	66598-2	66602-2	66601-2		

[1]Overall insulation crimp diameter, including crimp barrel, must not exceed .125 [3.18].
[2].000015 [0.00038] gold in the mating area over .000050 [0.00127] min. nickel.
[3].000030 [0.00076] gold in the mating area, with gold flash on remainder, over .000050 [0.00127] min. nickel.
[4].000030 [0.00076] gold in the mating area, with gold gradient on remainder, over .000050 [0.00127] min. nickel.
[5]**Contacts can ONLY be used in: Metrimate; CPC Series 1 (Arr. 23-24), Series 4 (Arr. 23-13M, 23-16M, 23-22M), and VDE connectors.**
[6]To use with the 626 Pneumatic Tool: remove crimping head from Straight Action Hand Tool (SAHT), order SAHT Adapter **Part No. 217201-1**, Adapter Holder **Part No. 356304-1** (with ratchet) or **189928-1** (without), and Power Unit **Part No. 189721-1** (hand actuated) or **189722-1** (foot actuated).
[S]Standard reeling of strip form contacts.
*Commercial PRO-CRIMPER II hand tool for field repair only. **Note:** Die Set can be adapted for use with 626 Pneumatic Tool System. **Insertion Tool Part No. 91002-1** (for insulation diameters .070 [1.78] or less), **No. 200893-2** (for insulation diameters .090 [2.29] max.). **Extraction Tool Part No. 305183.** (Instruction Sheet 408-1216)
***Call Technical Support for Machine Applicator Part Numbers.

Catalog 82021
Revised 7-06

www.tycoelectronics.com

Dimensions are in inches and millimeters unless otherwise specified. Values in brackets are metric equivalents.

Dimensions are shown for reference purposes only. Specifications subject to change.

USA: 1-800-522-6752
Canada: 1-905-470-4425
Mexico: 52-55-1106-0800
C. America: 57-1-254-4444

South America: 55-11-2103-6000
Hong Kong: 852-2735-1628
Japan: 81-44-844-8013
UK: 44-208-420-8341

Signal Contacts (Continued)

Enhanced High Current Type III+, Crimp, Snap-In

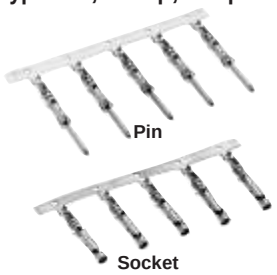

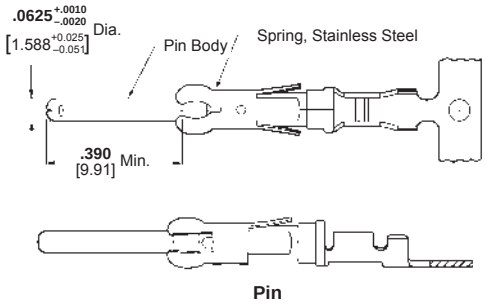

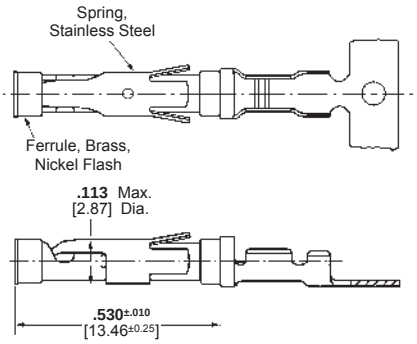

Material and Finish — See chart.

Contact Body—Copper Nickel Alloy

Retention Spring—Stainless steel

Related Product Data

Application Tooling — Pages 75-78

Technical Documents

114-10004 Application Specification

108-10024-2 Product Specification

Contact Size 16—Pin Diameter .062 [1.57]

Wire Size Range AWG	Wire Size Range mm²	Ins. Dia. Range	Contact Finish	Strip Form Contact No. Pin	Strip Form Contact No. Socket	Loose Piece Contact No. Pin	Loose Piece Contact No. Socket	Tooling Part No. Loose Piece Hand Tool	Tooling Part No. Strip Form Applicators
18-14	0.8-2.0	**.080-.100**[1] 2.03-2.54	Gold	1-66359-6	1-66358-9	1-66361-4	1-66360-4	91519-1[3]	466326-□*** or 466923-2***
			Tin	1-66359-9	2-66358-1	1-66361-6	1-66360-6		
		.110-.150[2] 2.79-3.81	Gold	1-66597-0	1-66598-1	66602-9	1-66601-0	91521-1[3]	466958-1*** or 567364-□***
			Tin	1-66597-1	1-66598-2	1-66602-0	1-66601-2		

1 Overall insulation crimp diameter, including crimp barrel, must not exceed .125 [3.18].
2 Contacts can ONLY be used in CPC, Series 1 (Arr. 23-24), Series 4 (Arr. 23-13M, 23-16M, 23-22M), and VDE connectors.
3 To use with the 626 Pneumatic Tool System: remove the crimping head from the Straight Action Hand Tool (SAHT) Assembly, order SAHT Adapter **Part No. 217201-1**, Adapter Holder **Part No. 356304-1** (with ratchet) or **189928-1** (without), and Power Unit **Part No. 189721-1** (hand actuated) or **189722-1** (foot actuated).
*** Call Technical Support for Automatic Machine Applicator Part Numbers.

Ratings

Voltage: 250 Volts AC/DC
600 Volts AC/DC, Series I, VDE tested and select loaded only

Base Current: Type III+ contacts: 17 amperes, 30˚C temperature rise with single contact on 14 AWG wire
Enhanced High Current Type III+ contacts: **25 amperes**, 30˚C temperature rise with single contact on 14 AWG wire

Temperature: -55˚C to +105˚C

VDE 0627: XA/630/4KV/2 - Series I, VDE tested only

Multiplication Rating Factor (F)

Type III+ Contacts (Note: 1 = 17 amperes)

Shell Size	Percent Connector Loading: Single Circuit, Wire Size 30 AWG	Single Circuit, Wire Size 14 AWG	≅ 50%, Wire Size 30 AWG	≅ 50%, Wire Size 14 AWG	100%, Wire Size 30 AWG	100%, Wire Size 14 AWG
11-4	.291	1	.212	.905	.140	.684
13-9	.278	.995	.175	.750	.134	.567
17-16	.270	.990	.146	.625	.127	.472
23-24	.281	.985	.138	.550	.120	.416
23-37	.275	.985	.131	.497	.114	.376

Enhanced High Current Type III+ Contacts (14 AWG wire only - Note: 1 = 25 amperes)

Shell Size	Percent Connector Loading: Single Circuit, 14 AWG	≅ 50%, 14 AWG	100%, 14 AWG
11-4	.880	.840	.640
13-9	.880	.640	.480
17-16	.880	.520	.400
23-24	.880	.520	.400
23-37	1	.440	.320

Catalog 82021
Revised 7-06

www.tycoelectronics.com

Dimensions are in inches and millimeters unless otherwise specified. Values in brackets are metric equivalents.

Dimensions are shown for reference purposes only. Specifications subject to change.

USA: 1-800-522-6752
Canada: 1-905-470-4425
Mexico: 52-55-1106-0800
C. America: 57-1-254-4444

South America: 55-11-2103-6000
Hong Kong: 852-2735-1628
Japan: 81-44-844-8013
UK: 44-208-420-8341

Signal Contacts (Continued)

Type III+ (Precision Formed, Crimp)

Contact Size—16
Pin Diameter—.062 [1.57]

Material and Finish

Contact Body—Copper alloy, plated tin or gold
Spring—Stainless steel

Grounding Pin
(make first - break last)

Related Product Data

Performance Characteristics—Page 6
Application Tooling—Pages 75-78
Technical Documents—Page 79

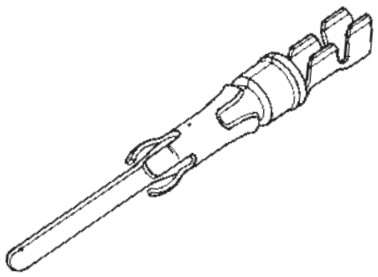

Wire Size Range mm²	Wire Size Range AWG	Ins. Dia. Range[1]	Contact Finish	Grounding Pin Part No. Strip Form	Grounding Pin Part No. Loose Piece	Strip Form Applicator Part No.	Loose Piece Hand Tool Part No.
0.12-0.2	26-24	**.035-.055** 0.89-1.4	Tin	164159-3	164162-1	—	91515-1[5] or 58495-1*
			Sel. Gold/Nickel[4]	164159-4	164162-2		
0.2-0.6	24-20	**.045-.070** 1.14-1.78	Bright Tin	164160-3	164163-1	466323-□*** or 466907-2***	91515-1[5] or 91505-1[5] or 58495-1*
			Sel. Gold/Nickel[4]	164160-4	164163-2		
0.8-1.4	18-16	**.078-.098** 1.98-2.49	Tin	164161-3	164164-1	466741-□*** or 680114-3***	91523-1[5] or 91505-1[5] or 58495-1*
			Sel. Gold/Nickel[4]	164161-4	164164-2		

[1]Overall insulation crimp diameter, including crimp barrel, must not exceed .125 [3.18].
[4]Gold flash over .000030 [0.00076] min. nickel on entire contact, with .000030 [0.00076] gold in contact area.
[5]To use with the 626 Pneumatic Tool System: remove the crimping head from the Straight Action Hand Tool (SAHT) Assembly, order SAHT Adapter **Part No. 217201-1**, Adapter Holder **Part No. 356304-1** (with ratchet) or **189928-1** (without), and Power Unit **Part No. 189721-1** (hand actuated) or **189722-1** (foot actuated).
*Commercial PRO-CRIMPER II hand tool for field repair only. **Note:** Die Set can be adapted for use with the 626 Pneumatic Tool System.
***Call Technical Support for Automatic Machine Applicator Part Numbers.
Extraction Tool Part No. 539972-1.

High Current Power Contact—Size 16

The features of the High Current Size 16 contact have been designed to retrofit into the existing AMP Connectors such as CPC (Circular Plastic Connector), CMC (Circular Metal Connector), G Series, M Series, Metrimate Square Grid and Drawer Connector housings. An initial T-Rise test in free air has shown a 23 amp capability with a 30° T-Rise. The contact may be crimped onto 14 AWG wire with an AMP hand tool **Part No. 601967-1**. Use turret TH502 **(1-601967-6)** for the pin and turret TH501 **(1-601967-5)** for the socket.

Material

Body—Copper alloy
Louvertac Band—Beryllium copper
Retention Spring—Stainless steel

Finish

Body—Silver
Louvertac Band—Gold

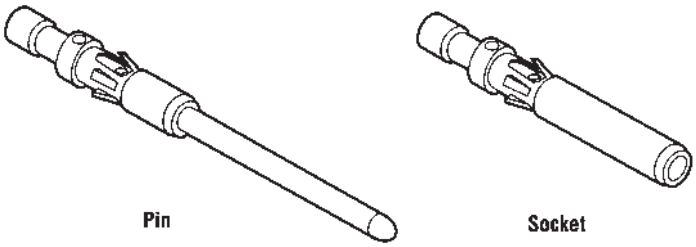

Wire Range mm²	Wire Range AWG	Contact Part Nos. Pin Loose Piece	Contact Part Nos. Pin Tape Mounted	Contact Part Nos. Socket Loose Piece	Contact Part Nos. Socket Tape Mounted	Crimping Tool Tool	Crimping Tool Turret for Pins	Crimping Tool Turret for Sockets
0.8-1.4	18-16	796964-1	796964-2	796966-1	796966-2	601967-1	1-601967-5	1-601967-5
2	14	193844-1	193844-2	193846-1	193846-2	601967-1	1-601967-6	1-601967-5

Extraction Tool Part No. 305183

Catalog 82021
Revised 7-06

www.tycoelectronics.com

Dimensions are in inches and millimeters unless otherwise specified. Values in brackets are metric equivalents.

Dimensions are shown for reference purposes only. Specifications subject to change.

USA: 1-800-522-6752
Canada: 1-905-470-4425
Mexico: 52-55-1106-0800
C. America: 57-1-254-4444

South America: 55-11-2103-6000
Hong Kong: 852-2735-1628
Japan: 81-44-844-8013
UK: 44-208-420-8341

Signal Contacts (Continued)

Type III+ (Precision Formed, Solder)

Contact Size—16

Pin Diameter—.062 [1.57]

Material and Finish

Contact Body—Copper alloy, plated tin or gold

Spring—Stainless steel

Related Product Data

Performance Characteristics—Page 6

Technical Documents—Page 79

Solder-Type
(with Preformed Wire Barrel/Insulation Support)

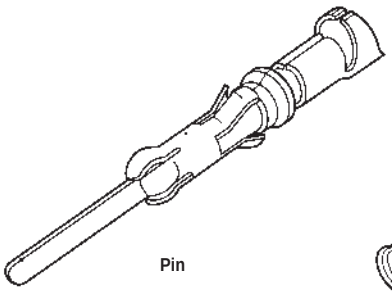

Pin

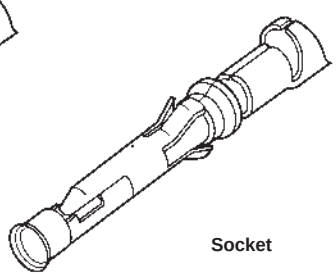

Socket



Pin Socket

Solder-Type

Solder-Tab

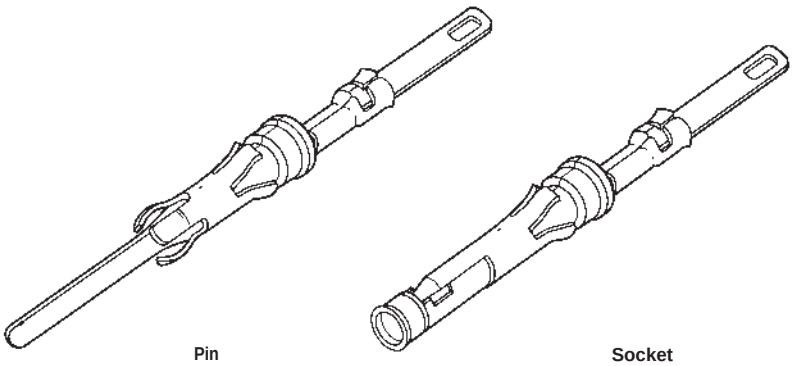

Pin Socket



Pin Socket

Solder-Tab

Contact Size 16—Pin Diameter .062 [1.57] (Test Current, 13 Ampere)‡

Wire Size Range		Contact Finish	Loose Piece Contact No.	
AWG	mm²		Pin	Socket
26-20	0.12-0.6	Gold/Nickel[1]	66182-1	66183-1
18-16	0.8-1.4	Gold/Nickel[1]	66180-1	66181-1
Solder Tab[4]		Duplex[2]	202236-7	202237-7
		Bright Tin	202236-5	202237-5

[1].000030 [0.00076] gold in mating area over .000030 [0.00076] min. nickel.
[2]Duplex plated .000030 [0.00076] gold in mating area over .000030 [0.00076] min. nickel on contact body; bright tin on solder tab.
[3]Bright tin on entire contact.
[4]Designed for up to 14 AWG; but, not to exceed current limitation of contact.
Note: These contacts can be used in Multimate contact cavities of all connector housings.
‡Single contact, free-air test current is not to be construed as contact rating current. Use only for testing. Refer to contact current carrying capability information on page 8.
Extraction Tool Part No. 305183

Signal Contacts (Continued)

Type II, Screw Machined, Crimp

Material

Contact Body—Brass
Retention Spring—Stainless steel

Finish

Contact Body—.000030 [0.00076] gold over .000050 [0.00127] nickel. Gold thickness controlled on socket O.D.
Retention Spring—Stainless steel

Related Product Data

Application Tooling—Pages 75-78



Pin

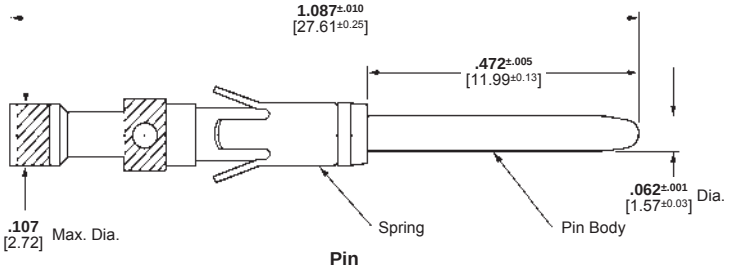

Pin



Socket

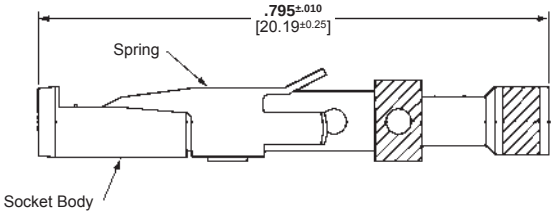

Socket

Contact Size 16—Pin Diameter .062 [1.57] (Test Current, 13 Ampere)‡

Wire Size Range AWG	Wire Size Range mm²	Ins. Dia. Range[1]	Tape Mounted Contact No.[2] Pin	Tape Mounted Contact No.[2] Socket	Loose Piece Contact No. Pin	Loose Piece Contact No. Socket	Contact Color Code	Tooling Part No. Tape Mounted: Dies for AMP-TAPETRONIC Machine 69875	Tooling Part No. Loose Piece: Die Set for 626 Pneumatic Tool System	Tooling Part No. Loose Piece: Hand Tool
28-24	0.08-0.20	**.035-.055** 0.89-1.40	201611-4	—	201611-1[4]	201613-1[5]	Red/Red	90249-2	90230-1[7]	91538-1 or 601967-1
		.048-.065 1.22-1.65	—	—	201334-1[4]	201332-1[5]	Red/Red			
		.095-.110 2.41-2.79	—	—	202410-1[4]	202411-1[5]	Green		—	601967-1
24-20	0.2-0.6	**.040-.062** 1.02-1.57	201578-4	—	201578-1[4]	201580-1[5]	Yellow/Red	90249-2	90230-1[7]	91538-1 or 58541-1*
		.055-.088 1.40-2.16	201330-6	201328-9	201330-1[4]	201328-1[5]	Yellow/Red			or 601967-1
18 (Two)	0.9-0.9 (Two)	No. Ins. Support	—	—	202725-1[4]	202726-1[4]	Blue	—	90231-2[7]	91539-1 or 601967-1
18-16	0.8-1.4	**.080-.105** 2.03-2.67	—	—	202507-1[4]	202508-1[5]	—	—	—	90136-1 or 601967-1
		No Ins. Support	200336-6	200333-8	200336-1[4]	200333-1[4]	Blue/Blue	90250-1	90231-2[7]	91539-1 58541-1* or 601967-1
			—	—	204219-1[5,6]	—	Blue/Blue	—	—	
14	2	No Ins. Support	212618-2[3]	201568-3	201570-1[4]	201568-1[5]	Violet/Blue	90250-1	90231-2[7]	91539-1 58541-1* or 601967-1
			201570-2	—	212618-1[3,6,†]	—	—	—	—	

[1]Overall insulation crimp diameter, including crimp barrel, must not exceed .125 [3.18].
[2]For AMP-TAPETRONIC Machine No. 69875, order contacts by Tape Mounted Contact No., plus packaging code "IM REEL" (5000 parts per reel).
[3]Grounding pin is used to provide a make-first/break-last condition when mating and unmating connector halves.
[4]Use turret TH502 (**1-601967-6**) with hand tool **601967-1**.
[5]Use turret TH501 (**1-601967-5**) with hand tool **601967-1**.
[6]Pin length is .630±.005 [16.002±.127] on these two pins.
[7]Die Set requires "C" Head Adapter **Part No. 318161-1**; Adapter Holder **Part No. 356304-1** (with ratchet) or **189928-1** (without); and Power Unit **Part No. 189721-2** (hand actuated) or **189722-2** (foot actuated).
*Commercial PRO-CRIMPER II Hand Tool for field repair use only. **Note:** Die Set can be adapted for use with the 626 Pneumatic Tool System.
†Does not use Hand Tool 91539-1 or 601967-1.
‡Single contact, free-air test current is not to be construed as contact rating current. Use only for testing. Refer to contact current carrying capability information on page 8.
Insertion Tool Part No. 200893-2 (for insulation diameters .070 [1.78] or less).
Extraction Tool Part No. 305183.

Catalog 82021
Revised 7-06

www.tycoelectronics.com

Dimensions are in inches and millimeters unless otherwise specified. Values in brackets are metric equivalents.

Dimensions are shown for reference purposes only. Specifications subject to change.

USA: 1-800-522-6752
Canada: 1-905-470-4425
Mexico: 52-55-1106-0800
C. America: 57-1-254-4444

South America: 55-11-2103-6000
Hong Kong: 852-2735-1628
Japan: 81-44-844-8013
UK: 44-208-420-8341

Coaxial Contacts

Subminiature Coax, Size 16 Precision Formed, Crimp



Pin



Socket

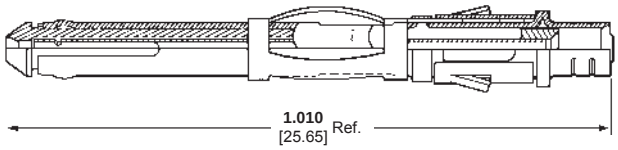

Pin

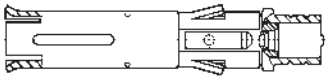

Socket

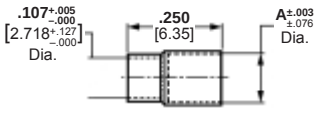

Ferrule
Part No. 5-225088-1—A .120 [3.05] Dia.
225088-3—A .123 [3.12] Dia.

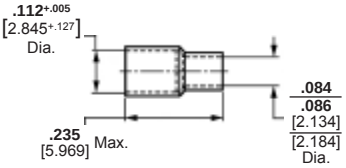

Ferrule
Part No. 1-332057-0

Material

Outer Shell—Brass per MIL-C-50
Center Conductor—Beryllium copper per QQ-C-533 (Pin); Brass per QQ-B-626 (Socket)
Inner Dielectric—Polypropylene
Retention Spring—Stainless steel per QQ-S-766
Ferrule—Copper per QQ-C-576

Finish

Outer Shell, Center Conductor—See charts
Ferrule†—Bright tin per MIL-T-10727

Related Product Data

Application Tooling—Pages 75-78

Selection Chart for Coaxial Cable

Cable Size (RG/U)	Contact Finish	Loose Piece Contact No.		Ferrule Part No.	Tooling Part No.	
		Pin	Socket		Die Sets for Hand Tool 69710-1 or 626 Pneumatic Tool System	Hand Tool or Die Set*
178, 196	Gold/Nickel Gold/Copper[1]	226537-2	51565-2	1-332057-0†	69690-2[7]	69656-2
	Gold/Nickel Gold/Copper[2]	—	51565-5			
196 (Double Braid)	Gold/Nickel Gold/Copper[1]	226537-2	51565-2	5-225088-1†	—	69656-9
	Gold/Nickel Gold/Copper[2]	—	51565-5			
174, 188, 316	Gold/Nickel Gold/Copper[1]	226537-1	51565-1	1-332056-0	69690[7]	91911-3*
	Gold/Nickel Gold/Copper[2]	226537-4	51565-4			
174 (Double Braid)	Gold/Nickel Gold/Copper[1]	226537-1	51565-1	5-225088-3	—	69656-7
	Gold/Nickel Gold/Copper[2]	226537-4	51565-4			
179, 187	Gold/Nickel Gold/Copper[1]	226537-1	51565-1	1-332056-0	69690-1[7]	91911-4*
	Gold/Nickel Gold/Copper[2]	226537-4	51565-4			
187 (Double Braid)	Gold/Nickel Gold/Copper[1]	226537-1	51565-1	5-225088-1†	—	69656-8
	Gold/Nickel Gold/Copper[2]	226537-4	51565-4			
161	Gold/Nickel Gold/Copper[1]	226537-1	51565-1	1-332056-0	—	—
	Gold/Nickel Gold/Copper[2]	226537-4	51565-4			

[1].000030 [0.00076] gold over .000050 [0.00127] nickel—outer shell and socket center conductor; .000030 [0.00076] gold over .000100 [0.00254] copper—pin center conductor.
[2].000050 [0.00127] gold over .000050 [0.00127] nickel—outer shell and socket center conductor; .000050 [0.00127] gold over .000100 [0.00254] copper—pin center conductor.
[7]Die Set requires "C" Head Adapter **Part No. 318161-1**; Adapter Holder **Part No. 356304-1** (with ratchet) or **189928-1** (without); and Power Unit **Part No. 189721-2** (hand actuated) or **189722-2** (foot actuated).
†Does not use Hand Tool 91539-1 or 601967-1.
*Used with PRO-CRIMPER II Hand Tool Frame **Part No. 354940-1**.
Extraction Tool Part No. 305183

Catalog 82021
Revised 7-06

www.tycoelectronics.com

Dimensions are in inches and millimeters unless otherwise specified. Values in brackets are metric equivalents.

Dimensions are shown for reference purposes only. Specifications subject to change.

USA: 1-800-522-6752
Canada: 1-905-470-4425
Mexico: 52-55-1106-0800
C. America: 57-1-254-4444

South America: 55-11-2103-6000
Hong Kong: 852-2735-1628
Japan: 81-44-844-8013
UK: 44-208-420-8341

Coaxial Contacts (Continued)

Subminiature Coax, Size 16 Precision Formed, Crimp (Continued)

Finish

Ferrule†—Bright tin per MIL-T-10727

Related Product Data

Application Tooling—Pages 75-78

Selection Chart for Twisted Pair and Shielded Wire

Wire Size AWG	Wire Size mm²	Contact Finish	Loose Piece Contact No. Pin	Loose Piece Contact No. Socket	Ferrule Part No.	Tooling Part No. Die Sets for Hand Tool 69710-1 or 626 Pneumatic Tool System	Tooling Part No. Hand Tool or Die Set*
30	0.05 (Twisted Pair, Solid)	Gold/Nickel Gold/Copper[1]	226537-3	51565-3	1-332057-0†	69690-2[7]	69656-2
		Gold/Nickel Gold/Copper[2]	226537-6	51565-6			
28	0.08-0.09 (Twisted Pair, Solid)	Gold/Nickel Gold/Copper[1]	226537-3	51565-3	1-332057-0†	69690[7]	91911-3*
		Gold/Nickel Gold/Copper[2]	226537-6	51565-6			
28	0.08-0.09 (Twisted Pair, Stranded 7 Str., .0050 [0.13] Dia.)	Gold/Nickel Gold/Copper[1]	226537-3	51565-3	1-332057-0†	69690-1[7] or 69690-2[7]	91911-4* or 69656-2
		Gold/Nickel Gold/Copper[2]	226537-6	51565-6			
26	0.12-0.15 (Twisted Pair, Solid or Stranded 7 Str., .0063 [0.16] Dia.)	Gold/Nickel Gold/Copper[1]	226537-3	51565-3	1-332057-0†	69690[7]	91911-3*
		Gold/Nickel Gold/Copper[2]	226537-6	51565-6			
26	0.12-0.15 (Shielded, .075 [1.91] Max. O.D.)	Gold/Nickel Gold/Copper[1]	226537-1	51565-1	1-332057-0†	69690-3[7]	69656-3
		Gold/Nickel Gold/Copper[2]	226537-4	51565-4			

[1].000030 [0.00076] gold over .000050 [0.00127] nickel—outer shell and socket center conductor; .000030 [0.00076] gold over .000100 [0.00254] copper—pin center conductor.
[2].000050 [0.00127] gold over .000050 [0.00127] nickel—outer shell and socket center conductor; .000050 [0.00127] gold over .000100 [0.00254] copper—pin center conductor.
[7]Die Set requires "C" Head Adapter **Part No. 318161-1**; Adapter Holder **Part No. 356304-1** (with ratchet) or **189928-1** (without); and Power Unit **Part No. 189721-2** (hand actuated) or **189722-2** (foot actuated).
*Used with PRO-CRIMPER II Hand Tool Frame **Part No. 354940-1**.
Note: A ferrule is required for each pin and socket.
Extraction Tool Part No. 305183.

Catalog 82021
Revised 7-06

www.tycoelectronics.com

Dimensions are in inches and millimeters unless otherwise specified. Values in brackets are metric equivalents.

Dimensions are shown for reference purposes only. Specifications subject to change.

USA: 1-800-522-6752
Canada: 1-905-470-4425
Mexico: 52-55-1106-0800
C. America: 57-1-254-4444

South America: 55-11-2103-6000
Hong Kong: 852-2735-1628
Japan: 81-44-844-8013
UK: 44-208-420-8341

Contact Arrangements, Series 1

Shell Sizes 11 and 13

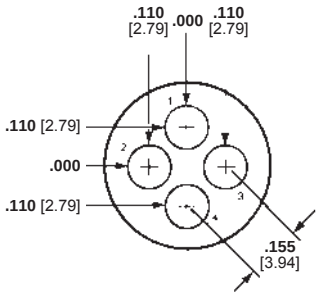

Arrangement 11-4
Max. Wire Ins. Dia. = .100 [2.54]

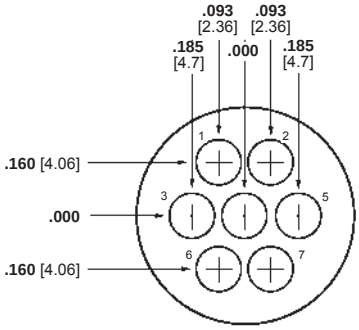

Arrangement 13-7
Max. Wire Ins. Dia. = .100 [2.54]

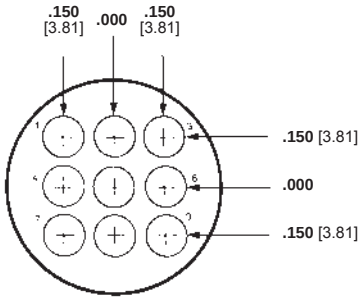

Arrangement 13-9
Max. Wire Ins. Dia. = .100 [2.54]

Shell Size 17

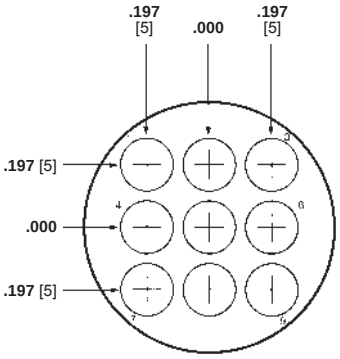

Arrangement 17-9
Max. Wire Ins. Dia. = .150 [3.81]

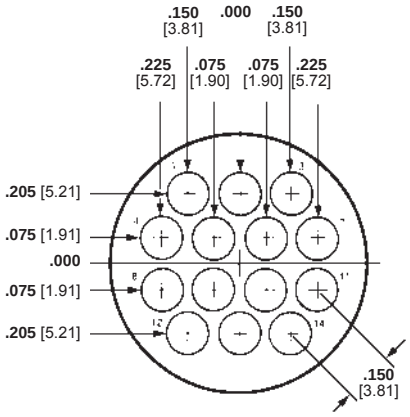

Arrangement 17-14
Max. Wire Ins. Dia. = .100 [2.54]

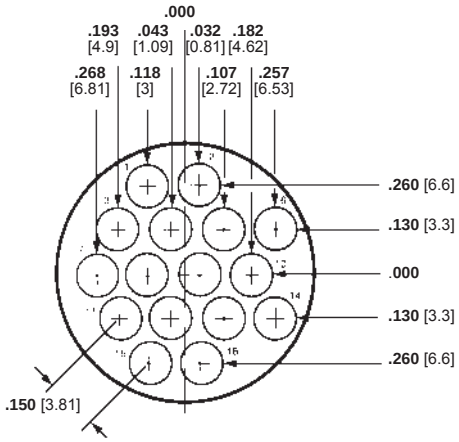

Arrangement 17-16
Max. Wire Ins. Dia. = .100 [2.54]

Shell Size 23

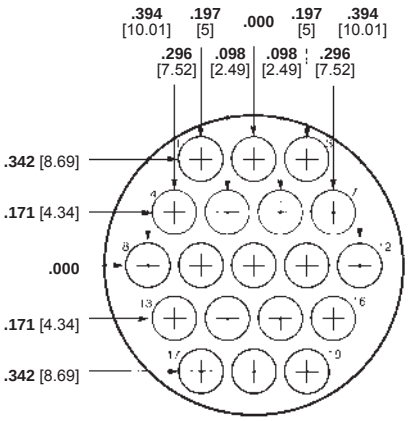

Arrangement 23-19
Max. Wire Ins. Dia. = .150 [3.81]

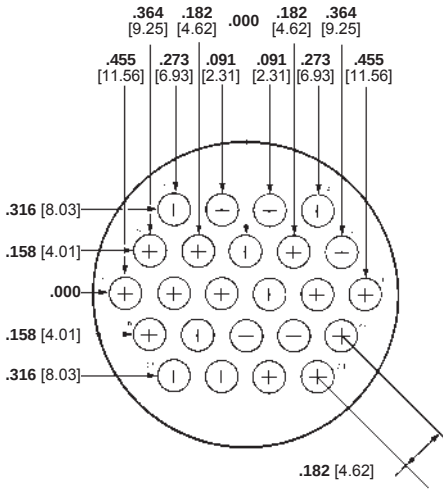

Arrangement 23-24
Max. Wire Ins. Dia. = .150 [3.81]

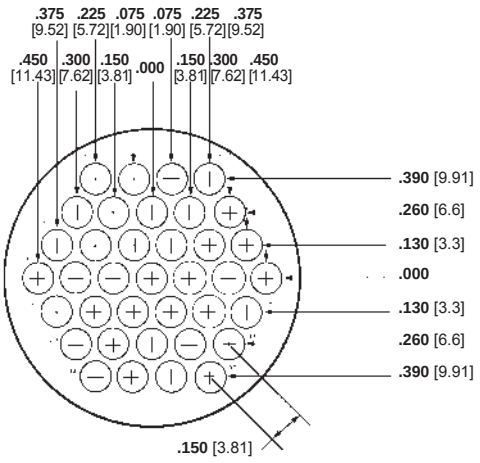

Arrangement 23-37
Max. Wire Ins. Dia. = .100 [2.54]

Note: Contact arrangements shown are for pin mating face (plug or receptacle). Socket mating face is mirror image.

Component Dimensions, Series 1

Square Flange Receptacle

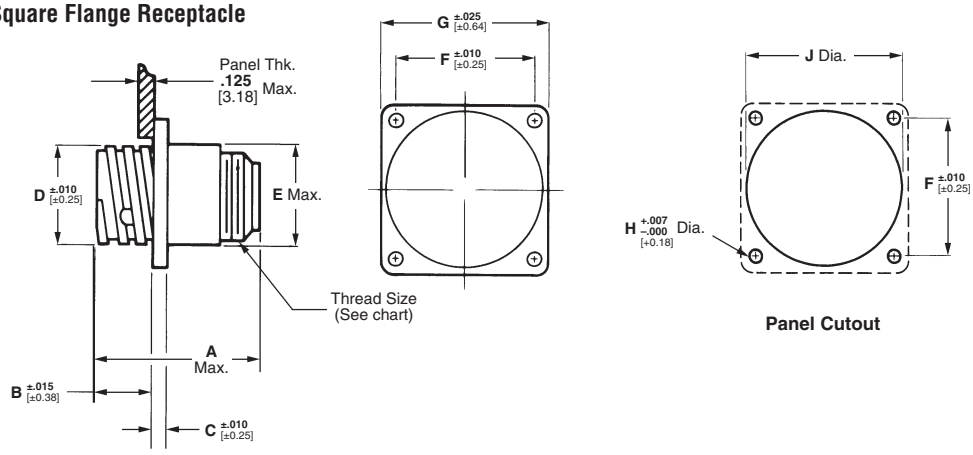

Free-Hanging Receptacle

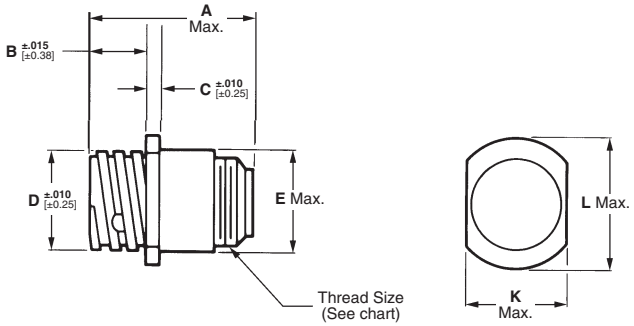

Plug

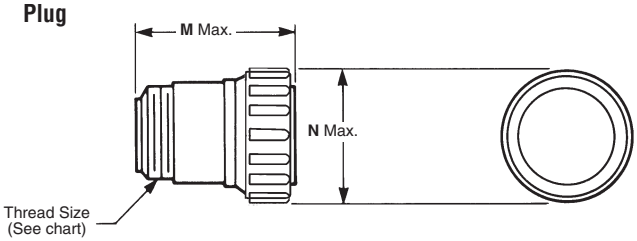

Shell Size	Sex	Dimensions													Thread Size
		A	B	C	D	E	F	G	H	J	K	L	M	N	
11	Rev.	**1.070** 27.18	**.420** 10.67	**.094** 2.39	**.687** 17.45	**.740** 18.8	**.844** 21.44	**1.125** 28.58	**.125** 3.18	**.840** 21.34	**.817** 20.75	**.935** 23.75	**1.365** 34.67	**.975** 24.77	5/8-24 UNEF-2A
	Std.	**1.350** 34.29											**1.080** 27.43		
13	Std.	**1.350** 34.29	**.420** 10.67	**.094** 2.39	**.812** 20.62	**.879** 22.33	**.969** 24.61	**1.281** 32.54	**.125** 3.18	**.979** 24.87	**.874** 22.2	**1.072** 27.23	**1.080** 27.43	**1.105** 28.07	3/4-20 UNEF-2A
17	Rev.	**1.070** 27.18	**.420** 10.67	**.094** 2.39	**1.050** 26.67	**1.110** 28.19	**1.125** 28.58	**1.435** 36.45	**.150** 3.81	**1.210** 30.73	**1.161** 29.49	**1.310** 33.27	**1.365** 34.67	**1.349** 34.26	15/16-20 UNEF-2A
	Std.	**1.350** 34.29											**1.080** 27.43		
23	Rev.	**1.070** 27.18	**.520** 13.21	**.156** 3.96	**1.438** 36.53	**1.510** 38.35	**1.438** 36.53	**1.750** 44.45	**.150** 3.81	**1.610** 40.89	**1.505** 38.23	**1.733** 44.02	**1.365** 34.67	**1.788** 45.42	1-3/8-18 UNEF-2A
	Std.	**1.350** 34.29											**1.080** 27.43		

Catalog 82021
Revised 7-06

www.tycoelectronics.com

Dimensions are in inches and millimeters unless otherwise specified. Values in brackets are metric equivalents.

Dimensions are shown for reference purposes only. Specifications subject to change.

USA: 1-800-522-6752
Canada: 1-905-470-4425
Mexico: 52-55-1106-0800
C. America: 57-1-254-4444

South America: 55-11-2103-6000
Hong Kong: 852-2735-1628
Japan: 81-44-844-8013
UK: 44-208-420-8341

Note: All part numbers are RoHS Compliant.

Connector Series and Types

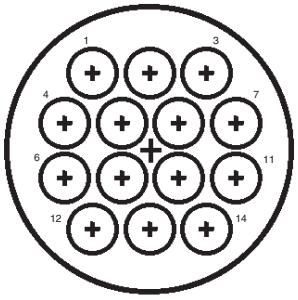

Series 1—Size 16 Contacts

Series 1 connectors permit the use of multiple combinations of signal and coaxial circuits in the same housing by accepting durable Multimate contacts. These pin and socket contacts include Type III+ and subminiature coaxial contacts, interchangeable in the same Multimate contact cavity. Type III+ contacts (.062 [1.57] pin diameter) are capable of carrying a maximum of 13 amperes when crimped in wire. Type III solder contacts and posted contacts for pc board applications are also available. Many connector arrangements offer both standard and reverse sex contact loading—**from 4 thru 37 positions.**

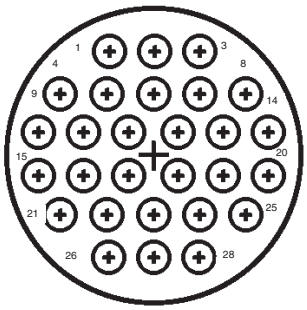

Series 2—Size 20 Contacts

Series 2 connectors accept Size 20 DF (precision formed) and Size 20 DM (screw-machined) pin and socket contacts with a .040 [1.02] pin diameter, Size 20 DF contacts are available in crimp and solder versions, as well as a posted version for wrap-type and pc board applications. Maximum current carrying capability is 7.5 amperes. Many connector arrangements offer both standard and reverse sex contact loading—**from 8 thru 63 positions.**

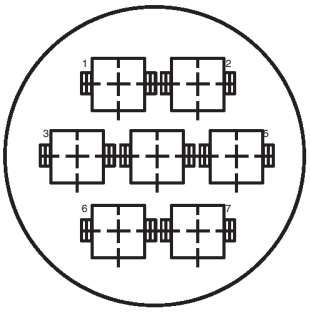

Series 3—Power Contacts

Series 3 connectors accept Type XII power contacts which can carry up to 25 amps per contact. These contacts will accommodate a wire size range of 16 to 10 AWG [1.4 to 5 mm^2]. Two connector sizes are available in both standard and reverse sex connector arrangements **3 and 7 positions.**

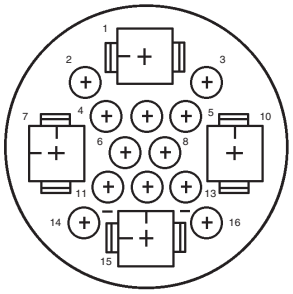

Series 4—Combination Size 16 and Power Contacts

Series 4 connectors accept Size 16 Multimate and Type XII power contacts, combining the signal and coaxial circuit capabilities of Series 1 connectors with the power circuit capabilities of Series 3 connectors. Available in two connector sizes offering power mixing combinations totaling **16 and 22 positions.**

Catalog 82021
Revised 7-07

www.tycoelectronics.com

Dimensions are in inches and millimeters unless otherwise specified. Values in brackets are metric equivalents.

Dimensions are shown for reference purposes only. Specifications subject to change.

USA: 1-800-522-6752
Canada: 1-905-470-4425
Mexico: 52-55-1106-0800
C. America: 57-1-254-4444

South America: 55-11-2103-6000
Hong Kong: 852-2735-1628
Japan: 81-44-844-8013
UK: 44-208-420-8341

Connector Series and Types (Continued)

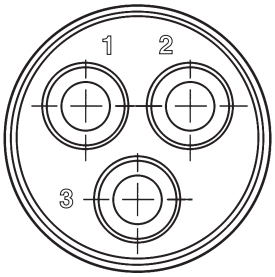

Series 5—Power Contacts .125 POWERBAND

Series 5 connectors combine the revolutionary performance of the new AMP POWERBAND Contact, high current contact in configurations similar to the Series 3 connectors. AMP POWERBAND contacts offer the electrical performance of the best Mil Spec Size 8 screw-machined contacts with the economy and productivity of strip-fed, precision formed contacts.

Series 5 connectors are environmentally sealable to meet IEC IP 65 and IP 67 specifications.

Rated at 600 VAC or VDC, 45 amperes maximum in a single contact, the connectors are available in free-hanging and panel-mount applications—**one connector configuration containing three .125 POWERBAND contacts.**

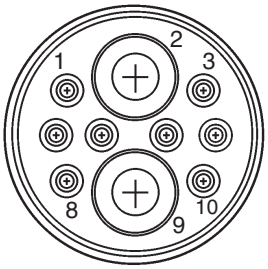

Series 6—Combination, Size 16 and .125 POWERBAND Contacts

Series 6 combines the high current and environmental sealing capability of Series 5, POWERBAND contacts, and the reliability of signal carrying, low current Type III+ contacts.

This combination of power and signal contacts is offered in **one connector configuration containing two .125 POWERBAND contacts and eight Type III+ signal pin and socket contacts.**

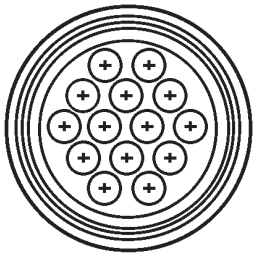

MIL-C-5015 Style—Size 16 Contacts

This new addition to the AMP Circular Plastic Connector Line is specifically designed to be **intermateable with Metal-Shell size 20-14 and 18-10, MIL-C-5015 Style connector systems.** The high impact resistant plastic housing offers the advantages of light weight and lower cost than existing metal-shell connectors. In addition the connector design prevents mismating when used with other insert arrangements. As part of the AMP Multimate family of connectors, the MIL-C-5015 style connector offers the economies of crimp Type III+ pin and socket contacts in reel-mounted, strip-form for high volume automatic machine termination, as well as in loose piece-form for low volume, prototype or maintenance and repair.

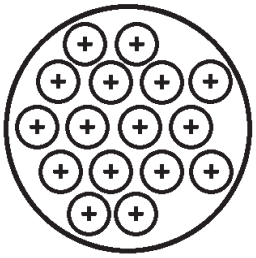

Metal-Shell, Circular Plastic Connectors

Metal-Shell CPC connectors consist of a black thermoplastic insert in a nickel-plated, zinc alloy shell. These connectors are currently available in **shell sizes 14, 22 and 28, and in two basic configurations consisting of plugs and square flange receptacles.**

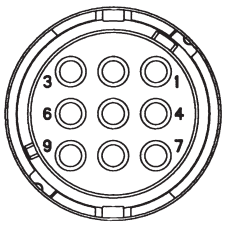

Miniature CPC Connectors

These compact connectors accept existing Mini-Universal MATE-N-LOK pin and socket contacts, 30-18 AWG [.05-.8 mm^2].

Two shell sizes (8 or 11) are available, accommodating **from 1 to 4 and 5 to 9 positions**.

Featuring high contact density and IP67 sealing, these durable connectors are well suited for many wire-to-wire, wire-to-board, and wire-to-panel applications.

Catalog 82021
Revised 7-07

www.tycoelectronics.com

Dimensions are in inches and millimeters unless otherwise specified. Values in brackets are metric equivalents.

Dimensions are shown for reference purposes only. Specifications subject to change.

USA: 1-800-522-6752
Canada: 1-905-470-4425
Mexico: 52-55-1106-0800
C. America: 57-1-254-4444

South America: 55-11-2103-6000
Hong Kong: 852-2735-1628
Japan: 81-44-844-8013
UK: 44-208-420-8341

Current Carrying Capabilities

The total current capacity of each contact in a given connector is dependent upon the heat rise resulting from the combination of electrical loads of the contacts in the connector arrangement and the maximum ambient temperature in which the connector will be operating. Caution must be taken so that this combination of conditions does not cause the internal temperature of the connector to exceed the maximum operating temperature of the housing material. Several variables which must be considered when determining this maximum current capability for your application are:

CONTACT CURRENT GUIDE Maximum Current (Amperes) for Largest Wire Size

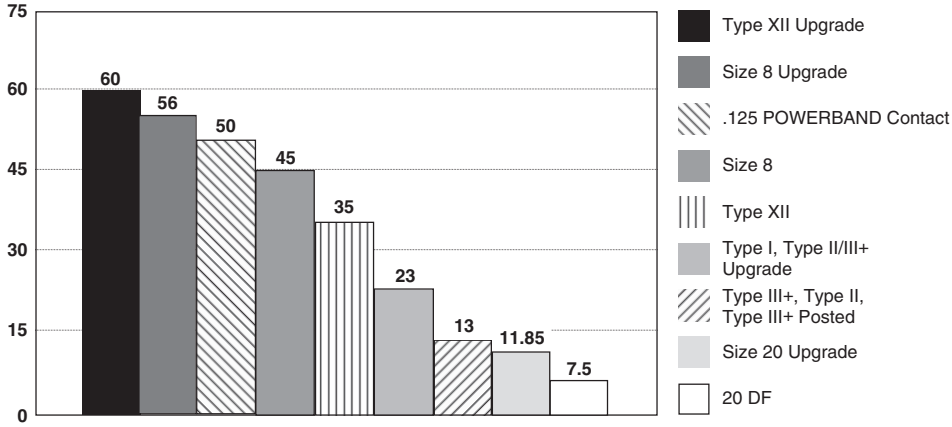

- **Wire Size**—Larger wire will carry more current since it has less internal resistance to current flow and generates less heat. The wire also conducts heat away from the connector.
- **Connector Size**—In general, with more circuits in a connector, less current per contact can be carried.
- **Current Load Distribution**—Spreading those lines with greater current loads throughout the connector, particularly around the outer perimeter, will enhance heat dissipation.
- **Ambient Temperature**—With higher ambient temperatures, less current can be carried.

Current Rating Verification Can a contact rated at 10 amps carry 10 amps?

Maybe yes, but probably not. The reason lies in the test conditions used to rate the contact. If these conditions do not adequately reflect the application conditions, the actual allowable current levels may be lower than specified levels. For example, many manufacturers, including Tyco Electronics, test a single contact in air. This gives an accurate measure of the basic current-carrying capacity of the contact. Use the contact alone in air and it can certainly carry 10 ampere. Use it in a multi-position connector surrounded by other current-carrying contacts or in high ambient temperatures, and the contact should carry less current.

Similarly, as the contact ages and stress relaxation, environmental cycling, and other degradation factors take their toll, the contact's current-carrying capacity decreases. A prudent design must set current levels for such end-of-design-life (EODL) conditions. Practical current-carrying capacity is not an absolute, but an application-dependent condition.

New Method Simplifies Ratings

To help the designer set the appropriate current level, Tyco Electronics has developed a method of specifying current-carrying capacity. This method takes into account the various application factors that influence current rating.

The method can be summarized as follows:

- The contact is aged to EODL conditions by durability cycling, thermal cycling, and environmental exposure.
- The contact's resistance stability is verified.
- The current necessary to produce the specified temperature rise is measured. This T-rise is usually 30°C.
- A rating factor is determined to allow derating of multiple contacts in the same housing and for different conductor sizes.

Temperature

One other factor influencing current levels is the maximum operating temperature, for example, 105°C. If the application has a high ambient temperature (over 75°C) the contact's T-rise is limited by the maximum operating temperature. For example, an application temperature of 90°C limits the contact T-rise to 15°C. Since current produces heat (the I^2R law), the current must be lowered to limit the T-rise.

A contact's T-rise depends not only on its I^2R Joule heating, but also on its ability to dissipate the heat. Consider a contact in a multi-contact housing. Joule heating in multiple contacts will raise the local ambient temperature. Since the contact will not be able to dissipate its own heat as well by convection, the maximum T-rise will be realized at a lower current level. Consequently, the allowable current level must be lower to maintain an acceptable T-rise.

For a given connector, the current level will be set by the loading density. A connector containing 50% current-carrying contacts will permit higher currents (per contact) than a connector will at 75% loading. The loading percentage assumes an even distribution of contacts within the housing. If all 10 contacts are grouped together in one section of a 20-position connector, the loading density may approach 100%.

The Importance of EODL

As stated, T-rise in a contact depends on both resistance and current. As it ages, a contact's resistance will increase. The contact designer will specify a maximum resistance for the contact, this level is the end-of-design-life resistance. Before the contact is tested for current, Tyco Electronics subjects it to a sequence of tests that exercises the major failure mechanisms and thereby simulates EODL conditions. Conditioning includes mating cycling, industrial mixed-flowing gases, humidity and temperature cycling, and vibration to sequentially introduce wear, corrosion, stress relaxation, and mechanical disturbance.

Catalog 82021
Revised 7-07

www.tycoelectronics.com

Dimensions are in inches and millimeters unless otherwise specified. Values in brackets are metric equivalents.

Dimensions are shown for reference purposes only. Specifications subject to change.

USA: 1-800-522-6752
Canada: 1-905-470-4425
Mexico: 52-55-1106-0800
C. America: 57-1-254-4444

South America: 55-11-2103-6000
Hong Kong: 852-2735-1628
Japan: 81-44-844-8013
UK: 44-208-420-8341

Presentation — An Example*

Current Rating

The presentation of current-carrying capacity in AMP product specifications includes two parts:

- First, a base curve showing current levels versus T-rise for a single circuit and the largest wire size (See figure 1). This represents the maximum current capacity of the contact. The curve is usually flat up to 75°C ambient and then drops off. Up to 75°C, the 30°C T-rise limits the amount of current, and above 75°C the current must be reduced to keep the combination of ambient temperature and T-rise from exceeding the maximum operating temperature of 105°C.
- Next are rating factors, a table of multipliers to account for connector loading and for smaller wire sizes (See figure 2). The designer first determines the base current for the ambient conditions of the application; then multiplies this base current by the rating factors to find the current level for the application's loading factor and wire size.

Practical Values

The current-rating method gives designers practical values applicable to their applications. While the specified current levels for a contact may be lower than for other testing methods, they are more practical and simplify the system design process.

"Spec-manship" is replaced by a realistic assessment of the current-carrying capacity of a contact under varying conditions of temperature, connector loading, and wire size.

Specific current-carrying data based on EOL and % loading is available from Tyco Electronics. Please contact your local Tyco Electronics Sales Engineer or call Tyco Electronics.

Connector/Contact Acceptability

As previously stated, choosing the correct connector/contact combination is fundamental to the successful function of all connectors. The Selector Chart shown at right, is designed to simplify your choice of connectors and their acceptable contacts. Once you have selected the wire size, current-carrying capacity need, number of positions required, and the type of contacts needed in your choice of connector, refer to this matrix for a quick look at exactly what is acceptable in a given connector type.

***Note:** Data is *not* typical of a specific CPC connector configuration. For specific current rating information based on % connector loading, contact Tyco Electronics.

To demonstrate the method of specifying current, consider the following application conditions; an ambient temperature of 65°C, a 50% loading of contacts in the housing, and 20 AWG [0.6mm²] wire.

- From Figure 1, the base current rating is 14 ampere with 18 AWG [0.8mm²] wire.
- Figure 2, the rating factor for 50% loading and 20 AWG [0.6mm²] wire is 0.68.
- The specific rating for this application is the product of the base rating and the rating factor:
  14 x 0.68 = 9.5 ampere
- Each of the contacts can carry 9.5 ampere.
- However, if the ambient temperature is 80°C the allowable T-rise becomes 25°C. The base current must be lowered to 12.8 ampere so that the 105°C maximum operating temperature is not exceeded. The current rating then becomes:
  12.8 x 0.68 = 8.7 ampere.

Figure 1

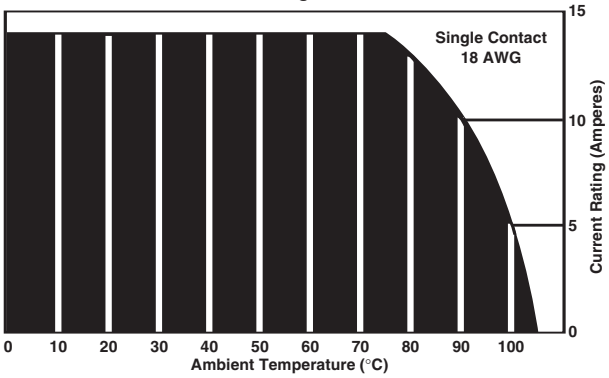

Graph shows the relationship between base current, ambient temperature, and contact T-rise.

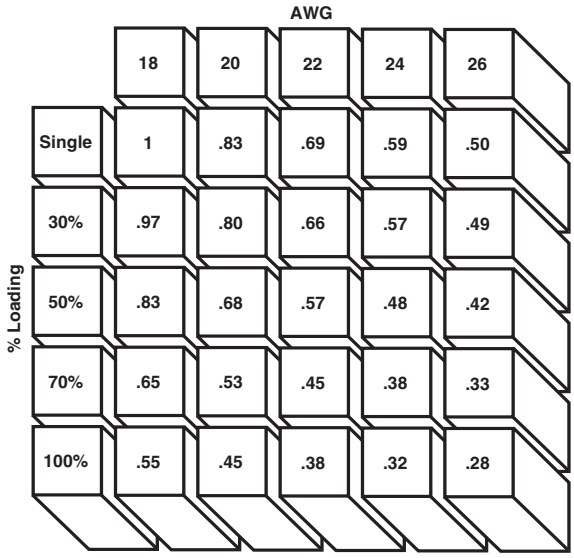

Figure 2

Rating factors allow the base current to be adjusted for various connector loading and wire sizes.

Contact Selector Chart

Connector Type	20 DF	Type I	Type II	Type III+	Posted Type III+	Type XII	Sub-Mini Coax	POWERBAND Contacts
CPC Series 1			✔	✔	✔		✔	
CPC Series 2	✔							
CPC Series 3						✔		
CPC Series 4			✔	✔		✔	✔	
CPC Series 5								✔
CPC Series 6		✔	✔	✔				✔
CPC 5015				✔				
CMC Series 1			✔	✔	✔		✔	
CMC Series 2	✔							
CMC Series 3						✔		
CMC Series 4			✔	✔		✔	✔	

Catalog 82021
Revised 7-07

www.tycoelectronics.com

Dimensions are in inches and millimeters unless otherwise specified. Values in brackets are metric equivalents.

Dimensions are shown for reference purposes only. Specifications subject to change.

USA: 1-800-522-6752
Canada: 1-905-470-4425
Mexico: 52-55-1106-0800
C. America: 57-1-254-4444

South America: 55-11-2103-6000
Hong Kong: 852-2735-1628
Japan: 81-44-844-8013
UK: 44-208-420-8341