Connector - SACC-M12MS-8CON-PG 9-SH - 1511857

Please be informed that the data shown in this PDF Document is generated from our Online Catalog. Please find the complete data in the user's documentation. Our General Terms of Use for Downloads are valid (http://download.phoenixcontact.com)



Sensor/actuator connector, male, straight, 8-pos., M12, shielded, A-coded, screw connection, metal knurl, cable screw connection Pg9

Product Features

- Safe use in the field, thanks to a high degree of protection
- Flexible: connectors for on-site assembly
- Screw connection: proven connection technology for a large selection of different conductors
- Reliable signal transmission - 360° shielding in environments with electromagnetic interference

Key commercial data

package_quantity	1
GTIN	4017918908638

Technical data

Dimensions

External diameter	6 mm ... 8 mm

Ambient conditions

Ambient temperature (operation)	-40 °C ... 85 °C (Plug / socket)
Degree of protection	IP67

General

Rated current at 40°C	2 A
Rated voltage	30 V
Number of positions	8
Contact resistance	≤ 3 mΩ
Insulation resistance	≥ 100 MΩ
Coding	A - standard
Standards/regulations	M12 connector IEC 61076-2-101
Status display	No
Surge voltage category	II
Pollution degree	3
Connection method	Screw connection
Conductor cross section	0.25 mm² ... 0.5 mm²
AWG conductor cross section	24 ... 18
Insertion/withdrawal cycles	≥ 100

Connector - SACC-M12MS-8CON-PG 9-SH - 1511857

Technical data

General

Torque	0.4 Nm (M12 knurl)
Torque	0.2 Nm (Screw terminal blocks)
Torque	0.8 Nm ... 1 Nm (Pressure screw)
Tightening torque	Screw plug insert with sleeve housing as far it will go
Assembly instructions	The wires can be connected both with ferrules and without ferrules

Material

Inflammability class according to UL 94	HB
Contact material	CuZn
Contact surface material	Au
Contact carrier material	PA 66
Material of grip body	Zinc die-cast, nickel-plated
Material, knurls	Nickel-plated brass
Sealing material	NBR

classifications

eCl@ss

eCl@ss 4.0	27140815
eCl@ss 4.1	27140815
eCl@ss 5.0	27143423
eCl@ss 5.1	27143423
eCl@ss 6.0	27143423
eCl@ss 7.0	27449001
eCl@ss 8.0	27449001

ETIM

ETIM 2.0	EC001121
ETIM 3.0	EC002062
ETIM 4.0	EC002062
ETIM 5.0	EC002062

UNSPSC

UNSPSC 6.01	31251501
UNSPSC 7.0901	31251501
UNSPSC 11	31251501
UNSPSC 12.01	31251501
UNSPSC 13.2	31251501

approvals

GOST /

Connector - SACC-M12MS-8CON-PG 9-SH - 1511857

approvals

Approval details

GOST

accessories

Torque tool

TSD 04 SAC - 1208429



TSD-M 1,2NM - 1212224



Screwdriver tools

SACC BIT M12-D20 - 1208445



TSD-M SAC-BIT ADAPTER - 1212600



Protective cap

Connector - SACC-M12MS-8CON-PG 9-SH - 1511857

accessories

PROT-M12 FS-PA-CHAIN - 1430873



Data cable by the meter

VS-OE-OE-94B-100,0 - 1416567



VS-OE-OE-94C-100,0 - 1416318



VS-OE-OE-94F-100,0 - 1416347



Drawings

Connector - SACC-M12MS-8CON-PG 9-SH - 1511857

Functional drawing

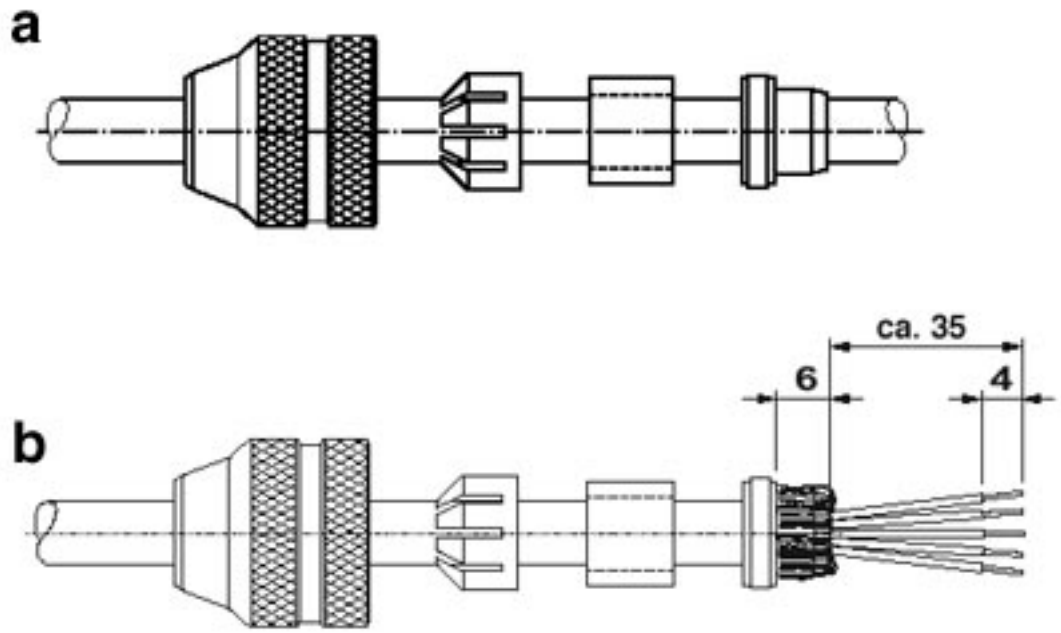

Assembly steps for M12 male/female plug and conductora = Slide on partsb= Strip conductor, widen shield and lay around the shielding ring, cut off projecting mesh. Slide cores through the housing. Mount shielding ring, gasket and clamping cage. Tighten pressure screw to fix the cable. Screw down cores. Mount male/female part. Tighten pressure screw.

Dimensioned drawing

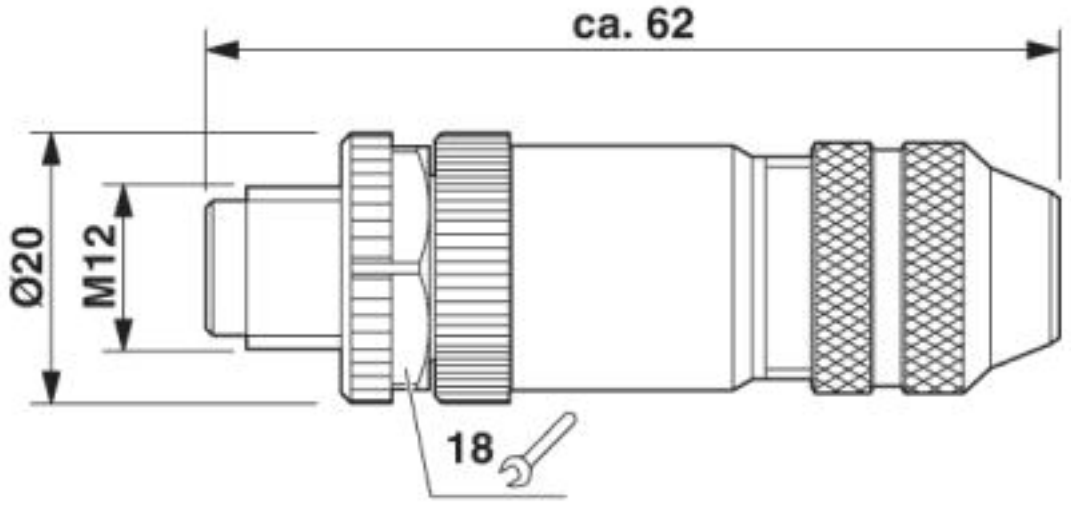

Plug, M12 x 1, straight, shielded

Connector - SACC-M12MS-8CON-PG 9-SH - 1511857

Schematic diagram

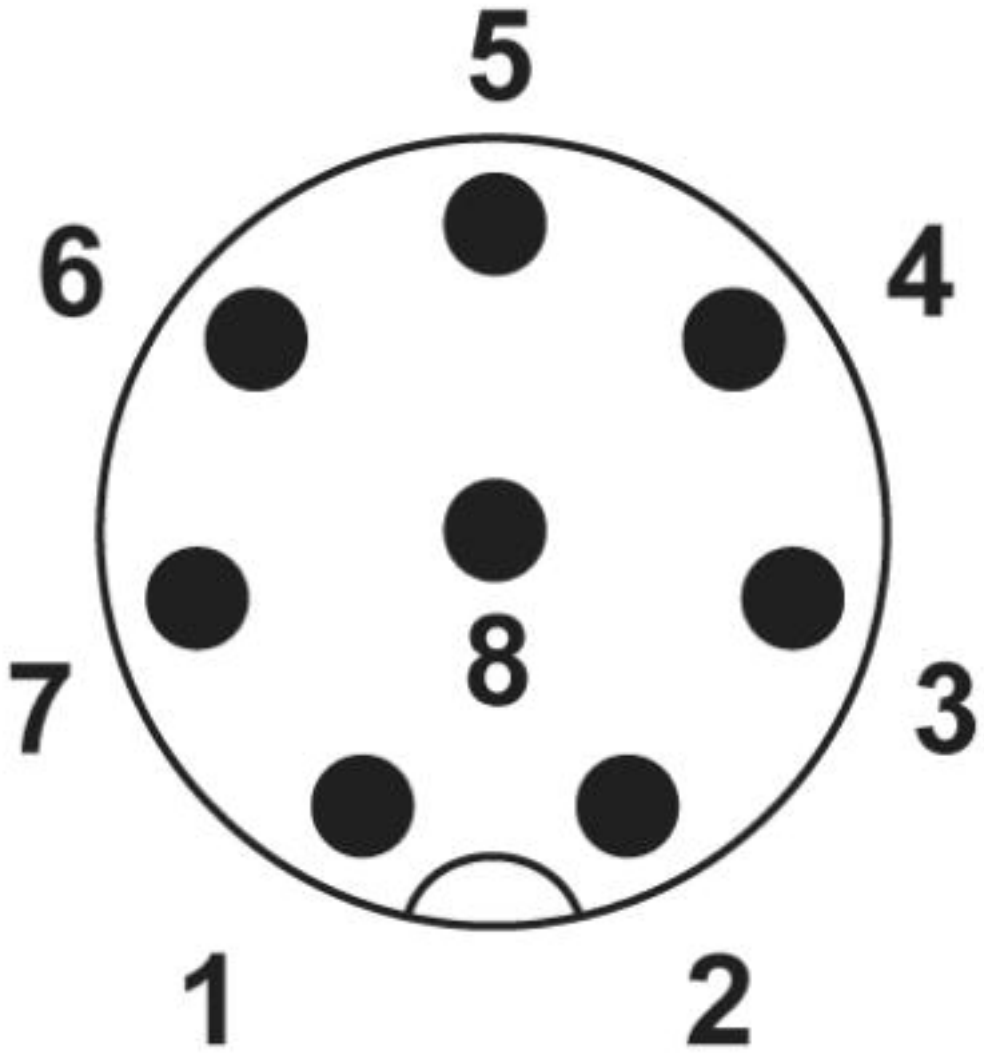

Plug M12, 8-pos.

© Phoenix Contact 2013 - all rights reserved
http://www.phoenixcontact.com