PCB terminal block - PTS 1,5/10-5,0-H - 1792944

Please be informed that the data shown in this PDF Document is generated from our Online Catalog. Please find the complete data in the user's documentation. Our General Terms of Use for Downloads are valid (http://download.phoenixcontact.com)



PCB terminal block, Nominal current: 12 A, Nom. voltage: 400 V, Pitch: 5 mm, Number of positions: 10, Connection method: Spring-cage conn., Mounting: Soldering, Conductor/PCB connection direction: 0 °, Color: green

Product Features

- Compact design
- Conductor cross section up to 2.5 mm²
- Integrated release button
- Conductor connection with direct plug-in technology
- Test connection

Key commercial data

package_quantity	100
GTIN	4046356616423

Technical data

Dimensions

Length	10.5 mm
Height	16.1 mm
Width	50 mm
Pitch	5 mm
Dimension a	45 mm
Pin dimensions	0,83 x 0,5 mm
Hole diameter	1.2 mm

General

Range of articles	PTS 1,5/..-H
Insulating material group	I
Rated surge voltage (III/3)	4 kV
Rated surge voltage (III/2)	4 kV
Rated surge voltage (II/2)	4 kV
Rated voltage (III/3)	250 V
Rated voltage (III/2)	400 V
Rated voltage (II/2)	630 V
Nominal current I_N	12 A
Nominal cross section	1.5 mm²

PCB terminal block - PTS 1,5/10-5,0-H - 1792944

Technical data

General

Maximum load current	12 A
Insulating material	PA
Solder pin surface	Sn
Inflammability class according to UL 94	V0
Stripping length	8 mm
Number of positions	10

Connection data

Conductor cross section solid min.	0.14 mm²
Conductor cross section solid max.	2.5 mm²
Conductor cross section stranded min.	0.14 mm²
Conductor cross section stranded max.	2.5 mm²
Conductor cross section stranded, with ferrule without plastic sleeve min.	0.25 mm²
Conductor cross section stranded, with ferrule without plastic sleeve max.	1.5 mm²
Conductor cross section stranded, with ferrule with plastic sleeve min.	0.25 mm²
Conductor cross section stranded, with ferrule with plastic sleeve max.	1.5 mm²
Conductor cross section AWG/kcmil min.	26
Conductor cross section AWG/kcmil max	14
Minimum AWG according to UL/CUL	26
Maximum AWG according to UL/CUL	14

classifications

eCl@ss

eCl@ss 4.0	272607xx
eCl@ss 4.1	27141109
eCl@ss 5.0	27141190
eCl@ss 5.1	27141190
eCl@ss 6.0	27261101
eCl@ss 7.0	27440401
eCl@ss 8.0	27440401

ETIM

ETIM 4.0	EC002643
ETIM 5.0	EC002643

UNSPSC

UNSPSC 6.01	30211801
UNSPSC 7.0901	39121432
UNSPSC 11	34131203
UNSPSC 12.01	39121432

PCB terminal block - PTS 1,5/10-5,0-H - 1792944

classifications

UNSPSC

UNSPSC 13.2	39121432

approvals

UL Recognized / cUL Recognized / GOST / GOST / cULus Recognized /

Approval details

UL Recognized

Usegroups	B	D
Nominal voltage UN	300 V	300 V
Nominal current IN	10 A	10 A
mm²/AWG/kcmil	26-14	26-14

cUL Recognized

Usegroups	B	D
Nominal voltage UN	300 V	300 V
Nominal current IN	10 A	10 A
mm²/AWG/kcmil	26-14	26-14

GOST

cULus Recognized

Drawings

PCB terminal block - PTS 1,5/10-5,0-H - 1792944

Drilling diagram

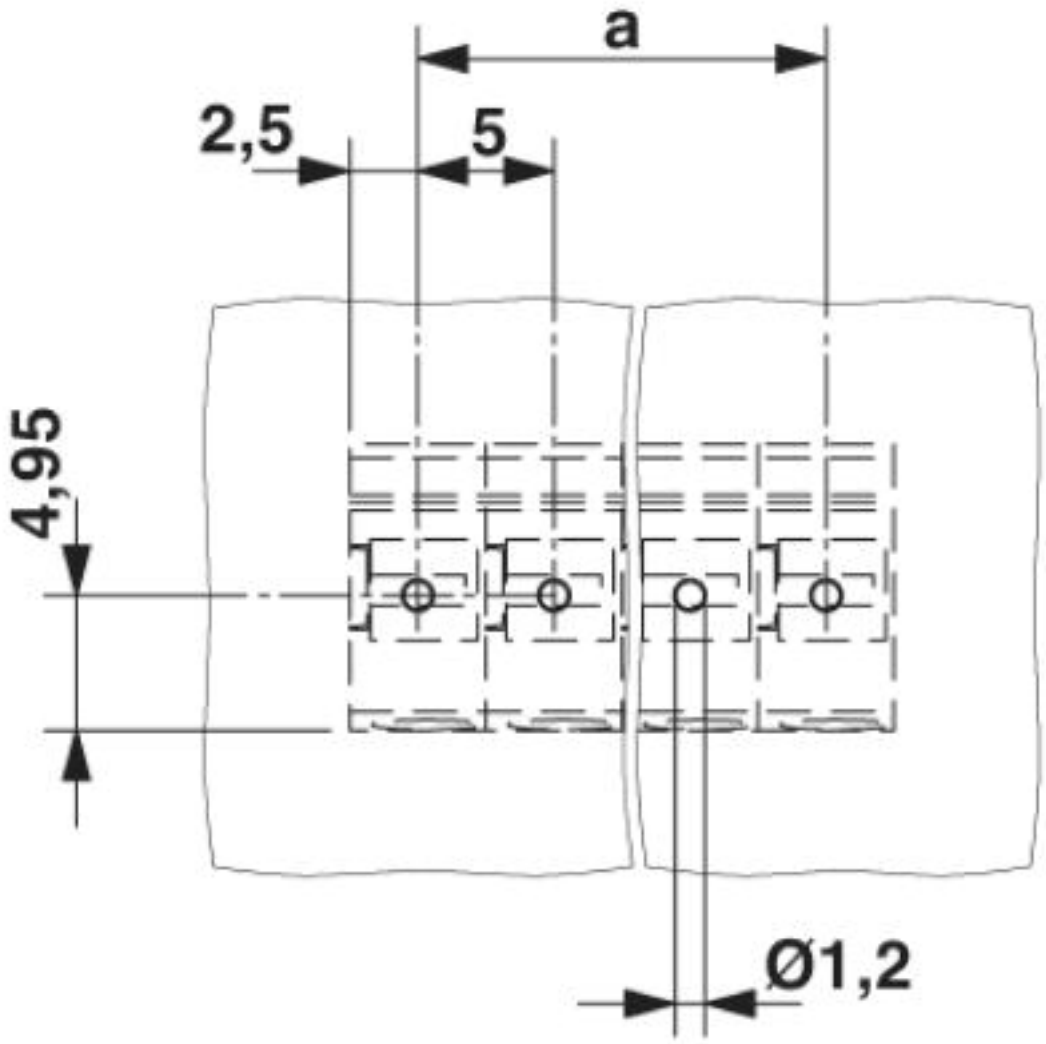

PCB terminal block - PTS 1,5/10-5,0-H - 1792944

Diagram

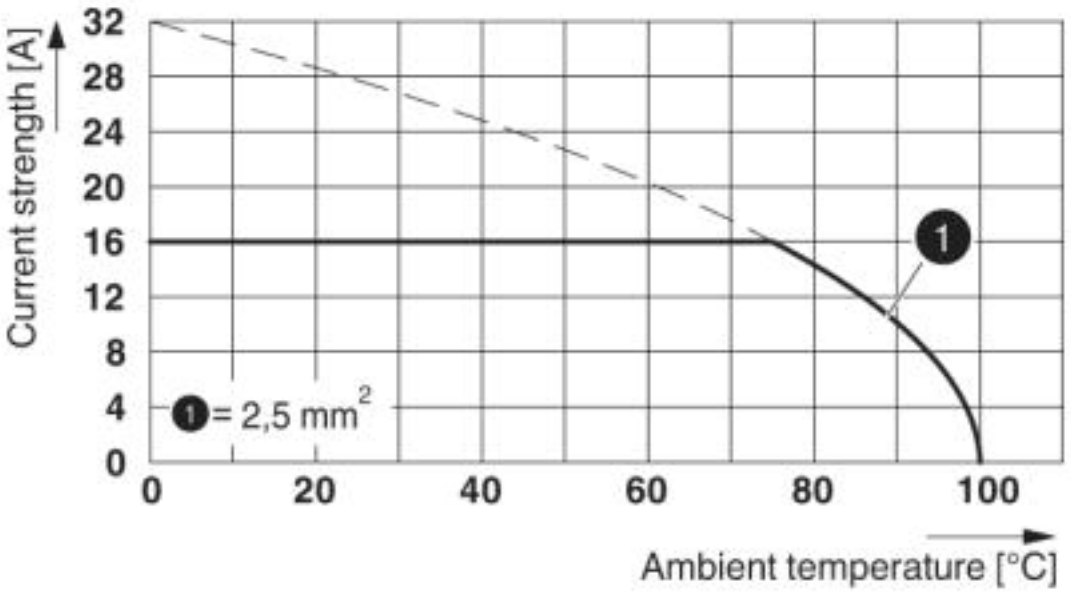

Dimensioned drawing

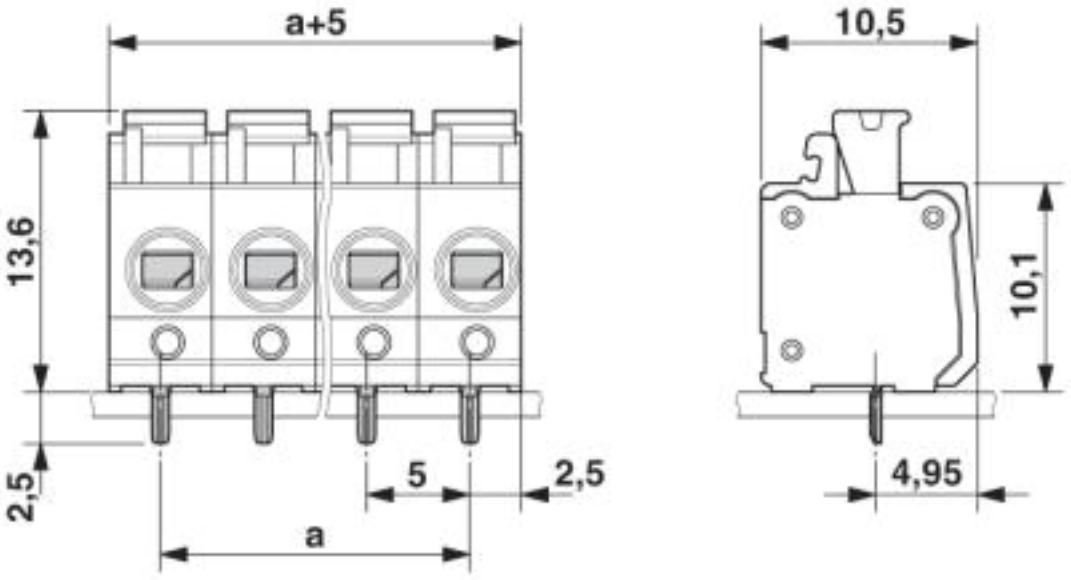

© Phoenix Contact 2013 - all rights reserved
http://www.phoenixcontact.com