THIS DRAWING IS UNPUBLISHED. RELEASED FOR PUBLICATION ,19 .
© COPYRIGHT 19 BY AMP INCORPORATED. ALL RIGHTS RESERVED.

LOC	DIST

REVISIONS 変更

P	LTR	DESCRIPTION	ECN	DATE	DWN	APVD
	D	再作成 (REDRAWN)	FJ00-0871-98	8 Jun '98		

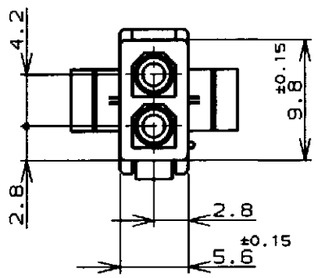

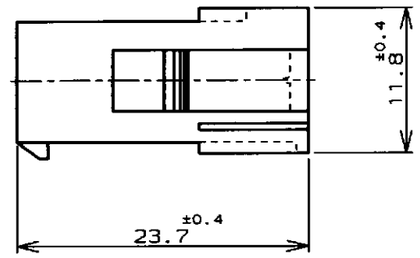

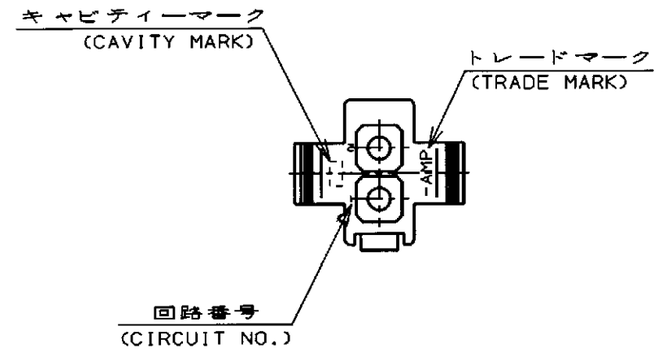

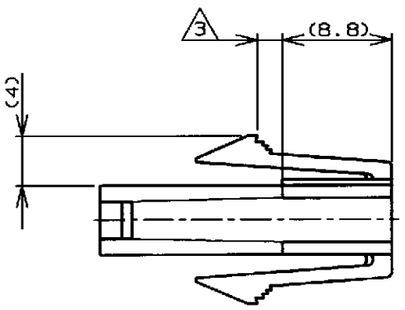

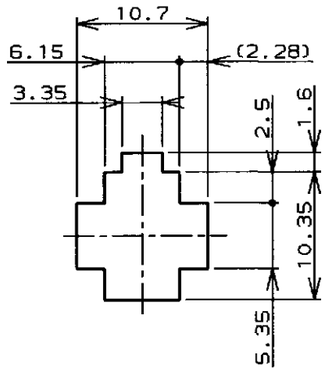

寸法公差は±0.20
(TOLERANCE: ±0.20)

パネル取付穴
(RECOMENDED PANEL OPENING DIMENSION)

注記;

1. 使用端子型番は170359, 170360, 170361, 170362
2. 嵌合相手ハウジング型番は172165
3. 適用パネル厚 0.8-2.0mm
4. 取付穴打抜方向とハウジングの挿入方向は同じとする。

NOTE;

1. APPLICABLE CONT P/N: 170359, 170360, 170361, 170362
2. MATING HSG P/N: 172165
3. APPLICABLE PANEL THICKNESS: 0.8~2.0mm
4. HOUSING INSERTION INTO THE PANEL CUT-OUT MUSTBE DONE IT THE SAME DIRECTION WITH PUNCH KNOCKING.

黒 (BLACK)	1-172157-9
青 (BLUE)	1- -6
緑 (GREEN)	1- -5
赤 (RED)	1- -2
自然色 (NATURAL)	172157-1
色 (COLOR)	型番 (P/N)

WIRE RANGE 抱合電線断面積 —//—
INSULATION DIA 被覆外径 —//—

THIS DRAWING IS A CONTROLLED DOCUMENT FOR AMP INCORPORATED. IT IS SUBJECT TO CHANGE AND THE CONTROLLING ENGINEERING ORGANIZATION SHOULD BE CONTACTED FOR THE LATEST REVISION.

DWN 8 Jun '98
CHK 15 JUN '98
APVD 15 JUN 98

DIMENSIONS: 単位・粍 mm

TOLERANCES UNLESS OTHERWISE SPECIFIED
一般公差 (GENERAL TOLERANCE) ±0.3

MATERIAL 材料: 66ナイロン UL94V-0 (66NYLON UL94V-0)
FINISH 仕上: —//—

PRODUCT SPEC 製品規格: 108-5138
INSTRACTION SHEET 取り扱い説明書: IS-105J
WEIGHT —//—

CUSTOMER DRAWING

AMP 日本エー・エム・ピー株式会社 Kawasaki, Japan

NAME 名称: 2極ミニユニバーサルメイテンロックキャップハウジング (UL94V-0)
2Pos MINI UNIVERSAL MATE-N-LOCK CONN.CAP HOUSING (UL94V-0)

SIZE	CAGE CODE	DRAWING NO 番号	RESTRICTED TO
A3	00779	C-172157	

SCALE 尺度 2-1 SHEET 1 OF 1 REV D

参考図面