Wire to Board Connectors
Mini-Universal MATE-N-LOK Connectors
PC Board Application Side

Pin Header
2, 3, 4, 6, 9, 12 and 15 Circuits

Material :
Housing — UL94V-0 rated
Nylon Natural
Contact — Phos. Brz./Pre-Tin

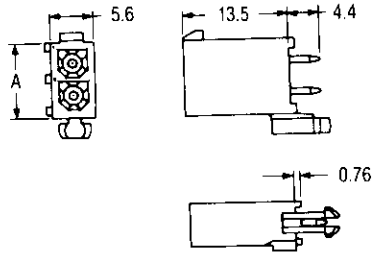

2 and 3 Circuits

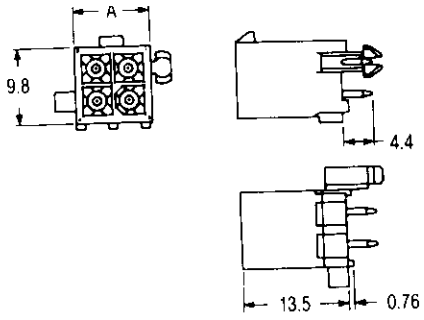

4 and 6 circuits

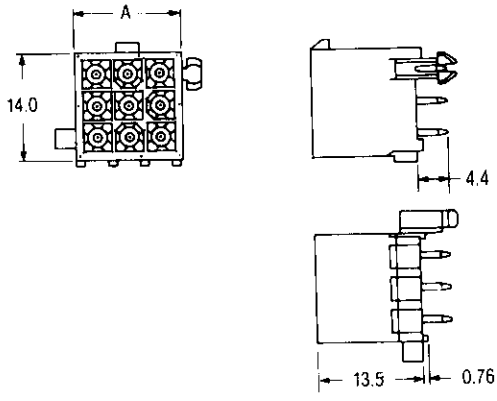

9, 12 and 15 Circuits

No. of Pos.	Dim. A	Part Number of Pin Header	Part Number of Mating Plug Housing
2	9.8	770166-1	172165-1
3	14.0	770170-1	172166-1
4	9.8	770174-1	172167-1
6	14.0	770178-1	172168-1
9	14.0	770182-1	172169-1
12	18.2	770186-1	172170-1
15	22.4	770190-1	172171-1

PC Board Layout
(Applicable PC Board Thickness : 1.6mm)

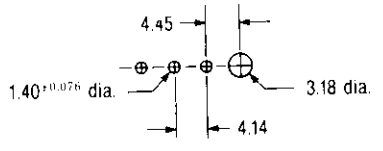

2 and 3 Circuits

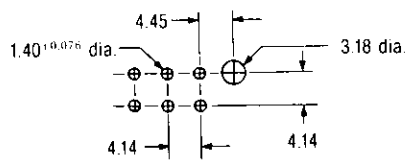

4 and 6 circuits

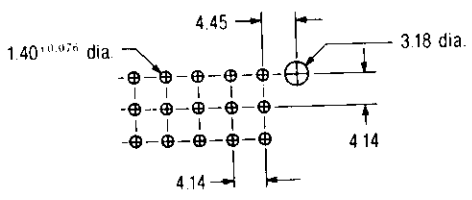

9, 12 and 15 Circuits