# Base strip - MSTBO 2,5/ 8-GR-5,08 - 1847165

Please be informed that the data shown in this PDF Document is generated from our Online Catalog. Please find the complete data in the user's documentation. Our General Terms of Use for Downloads are valid (http://download.phoenixcontact.com)



Header, Nominal current: 8 A, Rated voltage (III/2): 320 V, Number of positions: 8, Pitch: 5.08 mm, Color: green, Contact surface: Tin, Assembly: Soldering

## Product Features

- Header perpendicular (orthogonal) to the PCB
- PCB is to the right of the header
- Space-saving header

## Key commercial data

| | |
|---|---|
| **package_quantity** | 50 |
| **GTIN** | 4017918102609 |

## Technical data

### Dimensions

| | |
|---|---|
| **Length** | 14.65 mm |
| **Pitch** | 5.08 mm |
| **Dimension a** | 35.56 mm |
| **Pin dimensions** | 1,2 x 0,32 mm |
| **Hole diameter** | 1.3 mm |

### General

| | |
|---|---|
| **Range of articles** | MSTBO 2,5/..-GR |
| **Insulating material group** | I |
| **Rated surge voltage (III/3)** | 4 kV |
| **Rated surge voltage (III/2)** | 4 kV |
| **Rated surge voltage (II/2)** | 4 kV |
| **Rated voltage (III/3)** | 250 V |
| **Rated voltage (III/2)** | 320 V |
| **Rated voltage (II/2)** | 630 V |
| **Connection in acc. with standard** | EN-VDE |
| **Nominal current $I_N$** | 8 A |
| **Maximum load current** | 8 A |
| **Insulating material** | PA |
| **Inflammability class according to UL 94** | V0 |
| **Color** | green |

# Base strip - MSTBO 2,5/ 8-GR-5,08 - 1847165

## Technical data

### General

| | |
|---|---|
| **Number of positions** | 8 |

## classifications

### eCl@ss

| | |
|---|---|
| **eCl@ss 4.0** | 272607xx |
| **eCl@ss 4.1** | 27260701 |
| **eCl@ss 5.0** | 27260701 |
| **eCl@ss 5.1** | 27260701 |
| **eCl@ss 6.0** | 27260704 |
| **eCl@ss 7.0** | 27440402 |
| **eCl@ss 8.0** | 27440402 |

### ETIM

| | |
|---|---|
| **ETIM 3.0** | EC001121 |
| **ETIM 4.0** | EC002637 |
| **ETIM 5.0** | EC002637 |

### UNSPSC

| | |
|---|---|
| **UNSPSC 6.01** | 30211810 |
| **UNSPSC 7.0901** | 39121409 |
| **UNSPSC 11** | 39121409 |
| **UNSPSC 12.01** | 39121409 |
| **UNSPSC 13.2** | 39121409 |

## approvals

CSA / UL Recognized / VDE Gutachten mit Fertigungsüberwachung / cUL Recognized / IECEE CB Scheme / CCA / cULus Recognized /

### Approval details

**CSA**

| Usegroups | B | D |
|---|---|---|
| Nominal voltage UN | 300 V | 300 V |
| Nominal current IN | 6.5 A | 6.5 A |
| mm²/AWG/kcmil | | |

**UL Recognized**

# Base strip - MSTBO 2,5/ 8-GR-5,08 - 1847165

## approvals

| Usegroups | B | D |
|---|---|---|
| Nominal voltage UN | 250 V | 300 V |
| Nominal current IN | 8 A | 8 A |
| mm²/AWG/kcmil | | |

**VDE Gutachten mit Fertigungsüberwachung**

| | |
|---|---|
| Nominal voltage UN | 250 V |
| Nominal current IN | 8 A |
| mm²/AWG/kcmil | |

**cUL Recognized**

| Usegroups | B | D |
|---|---|---|
| Nominal voltage UN | 250 V | 300 V |
| Nominal current IN | 8 A | 8 A |
| mm²/AWG/kcmil | | |

**IECEE CB Scheme**

| | |
|---|---|
| Nominal voltage UN | 250 V |
| Nominal current IN | 8 A |
| mm²/AWG/kcmil | |

**CCA**

| | |
|---|---|
| Nominal voltage UN | 250 V |
| Nominal current IN | 8 A |
| mm²/AWG/kcmil | |

**cULus Recognized**

## accessories

**Coding element**

# Base strip - MSTBO 2,5/ 8-GR-5,08 - 1847165

## accessories

CR-MSTB - 1734401



**Labeled terminal marker**

SK 5,08/3,8:FORTL.ZAHLEN - 0804293



**Flange**

MSTB-BF - 1759981



**Filler plug**

MSTB-BL - 1755477



## Drawings

# Base strip - MSTBO 2,5/ 8-GR-5,08 - 1847165

Drilling diagram

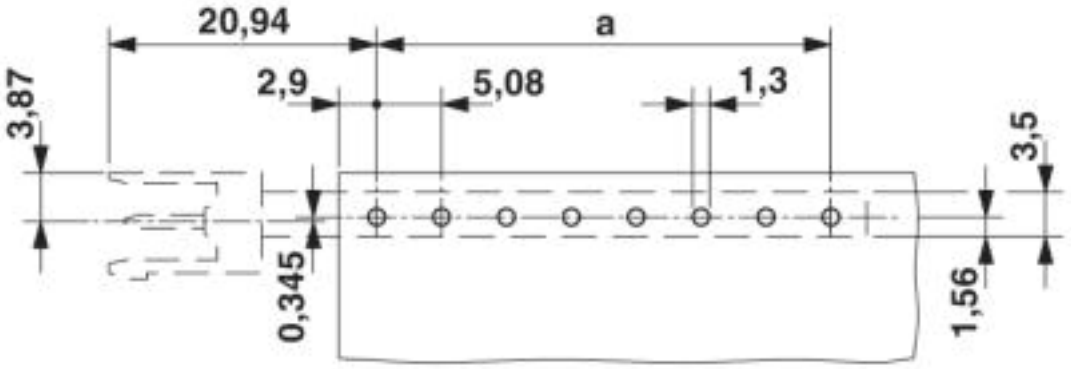


Dimensioned drawing

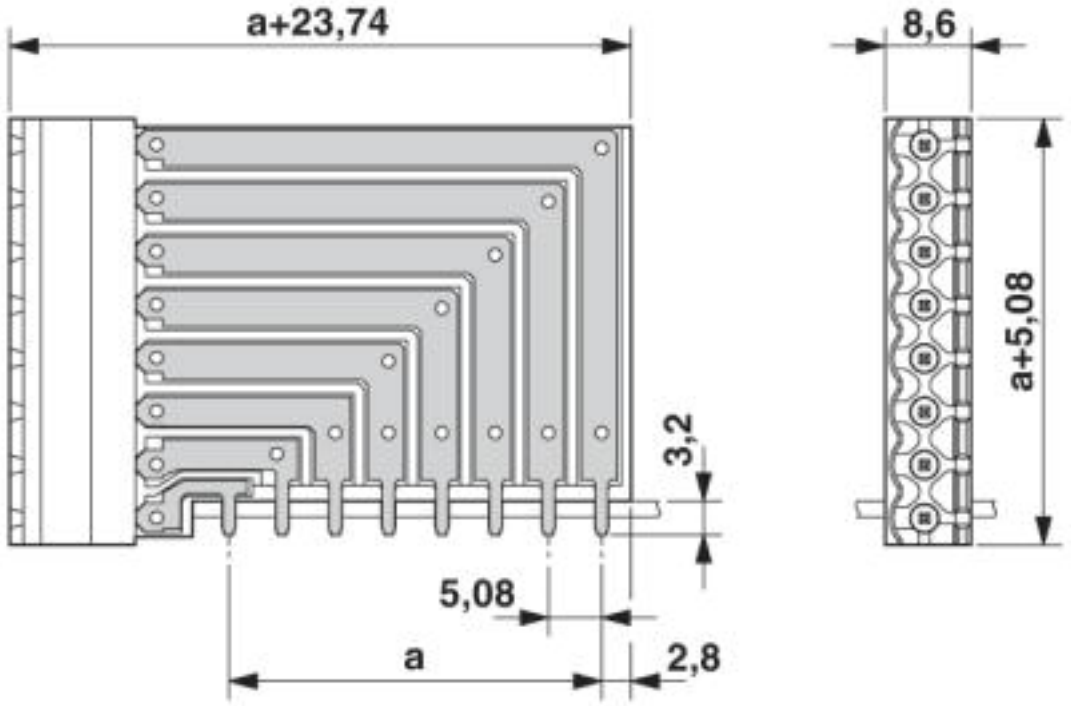


© Phoenix Contact 2013 - all rights reserved
http://www.phoenixcontact.com