Electronic housing - ME 17,5 TBUS 1,5/ 5-ST-3,81 KMGY - 2713645

Please be informed that the data shown in this PDF Document is generated from our Online Catalog. Please find the complete data in the user's documentation. Our General Terms of Use for Downloads are valid (http://download.phoenixcontact.com)



Plug component, Nominal current: 8 A

Key commercial data

package_quantity	50
GTIN	4017918914509

Technical data

Dimensions

Width	3.5 mm

General

Rated voltage (III/3)	125 V
Nominal current I_N	8 A
Maximum load current	8 A
Inflammability class according to UL 94	V0

classifications

eCl@ss

eCl@ss 4.0	27180401
eCl@ss 4.1	27180401
eCl@ss 5.0	27180506
eCl@ss 5.1	27180506
eCl@ss 6.0	27260704
eCl@ss 7.0	27449001
eCl@ss 8.0	27449001

ETIM

ETIM 2.0	EC001031
ETIM 3.0	EC001031
ETIM 4.0	EC002638
ETIM 5.0	EC002638

Electronic housing - ME 17,5 TBUS 1,5/ 5-ST-3,81 KMGY - 2713645

classifications

UNSPSC

UNSPSC 6.01	31261501
UNSPSC 7.0901	31261501
UNSPSC 11	31261501
UNSPSC 12.01	31261501
UNSPSC 13.2	31261501

approvals

UL Recognized / cUL Recognized / cULus Recognized /

Approval details

UL Recognized

cUL Recognized

Usegroups	**B**	**D**
Nominal voltage UN	150 V	150 V
Nominal current IN	8 A	8 A
mm²/AWG/kcmil		

cULus Recognized

Drawings

Electronic housing - ME 17,5 TBUS 1,5/ 5-ST-3,81 KMGY - 2713645

Drilling diagram

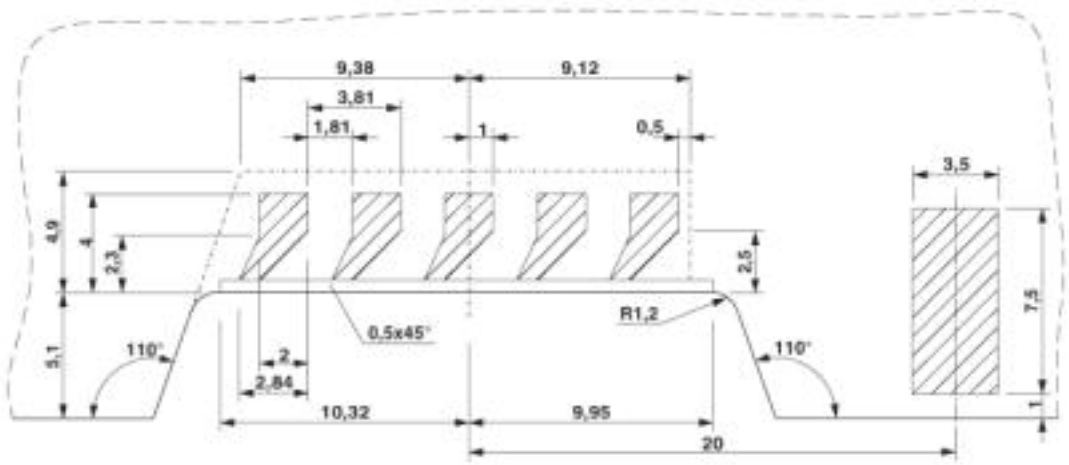

Detailed dimensional drawing of the DIN rail connector contact pads

Dimensioned drawing

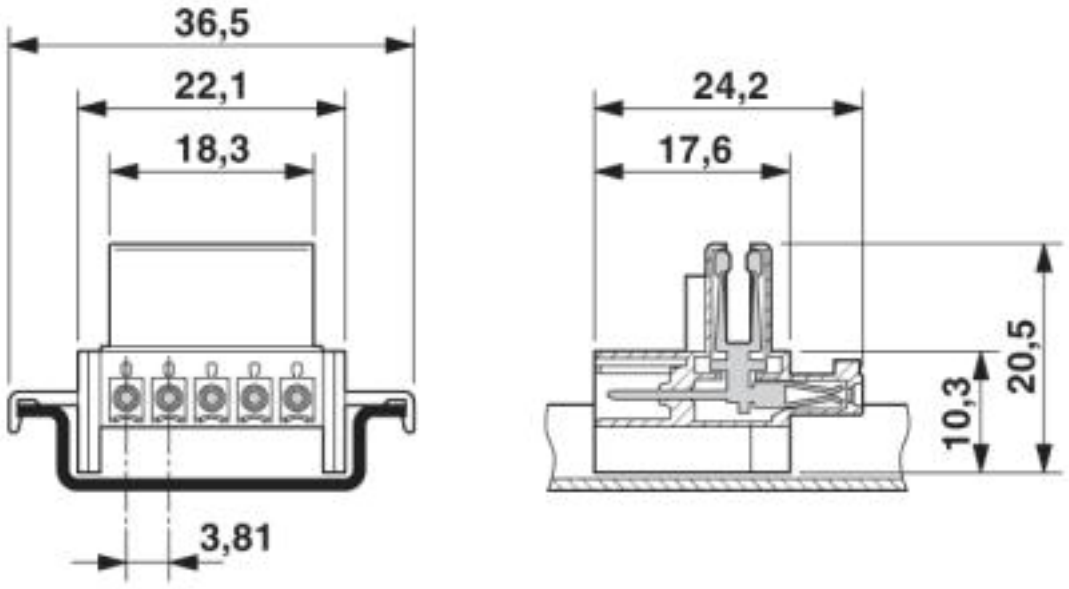

Electronic housing - ME 17,5 TBUS 1,5/ 5-ST-3,81 KMGY - 2713645

Dimensioned drawing

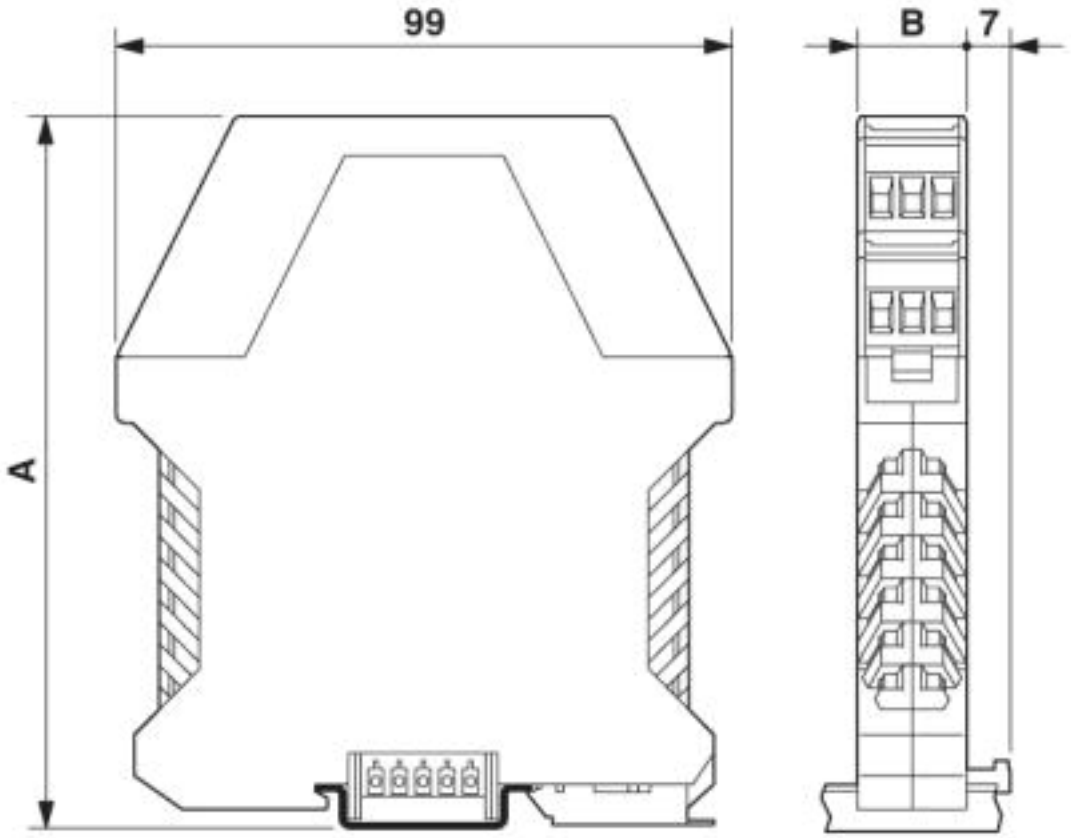

Electronic housing - ME 17,5 TBUS 1,5/ 5-ST-3,81 KMGY - 2713645

Dimensioned drawing

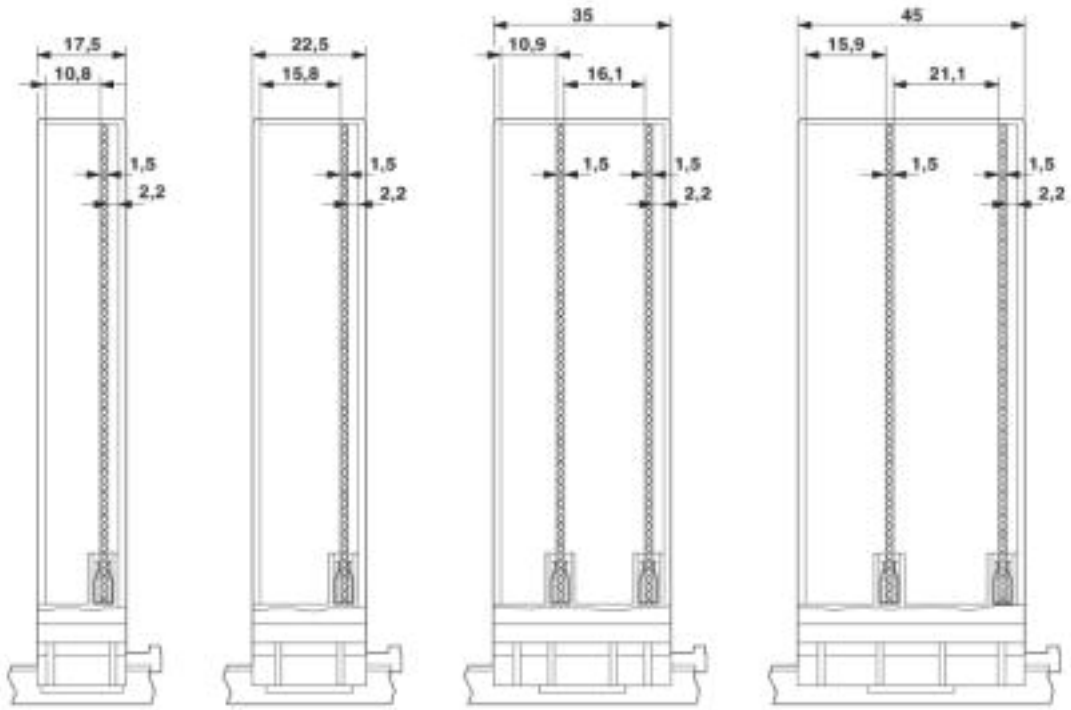

© Phoenix Contact 2013 - all rights reserved
http://www.phoenixcontact.com