PCB connection terminal block - SPTA 1/12-3,5 - 1752201

Please be informed that the data shown in this PDF Document is generated from our Online Catalog. Please find the complete data in the user's documentation. Our General Terms of Use for Downloads are valid (http://download.phoenixcontact.com)

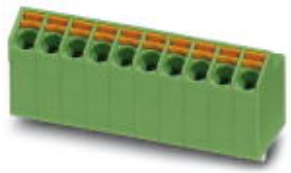

The illustration shows the 10-position version

PCB terminal block, Nominal current: 9 A, Nom. voltage: 200 V, Pitch: 3.5 mm, Number of positions: 12, Connection method: Spring-cage conn., Mounting: Soldering, Conductor/PCB connection direction: 45 °, Color: green

Product Features

- Compact design with a depth of just 10 mm
- Easy operation when releasing the conductor via the orange actuating lever
- User-friendly and quick conductor connection using Push-in direct plug-in technology
- Arrangement over several rows possible for high packing densities
- Drilling diagram and dimensions are the same shape as the proven SMKDS 1 screw solution
- Different pitches can be combined depending on product range

Key commercial data

package_quantity	50
GTIN	4046356321051

Technical data

Dimensions

Length	10 mm
Pitch	3.5 mm
Dimension a	38.5 mm
Pin dimensions	0,6 x 1,0 mm
Pin spacing	3.5 mm
Hole diameter	1.1 mm

General

Range of articles	SPTA 1/
Insulating material group	I
Rated surge voltage (III/3)	2.5 kV
Rated surge voltage (III/2)	2.5 kV
Rated surge voltage (II/2)	2.5 kV
Rated voltage (III/3)	160 V
Rated voltage (III/2)	200 V
Rated voltage (II/2)	400 V
Connection in acc. with standard	EN-VDE

PCB connection terminal block - SPTA 1/12-3,5 - 1752201

Technical data

General

Nominal current I_N	9 A
Nominal cross section	1 mm²
Maximum load current	9 A
Insulating material	PA
Solder pin surface	Sn
Inflammability class according to UL 94	V0
Stripping length	8 mm
Number of positions	12

Connection data

Conductor cross section solid min.	0.2 mm²
Conductor cross section solid max.	1.5 mm²
Conductor cross section stranded min.	0.2 mm²
Conductor cross section stranded max.	1 mm²
Conductor cross section stranded, with ferrule without plastic sleeve min.	0.25 mm²
Conductor cross section stranded, with ferrule without plastic sleeve max.	0.75 mm²
Conductor cross section stranded, with ferrule with plastic sleeve min.	0.25 mm²
Conductor cross section stranded, with ferrule with plastic sleeve max.	0.75 mm²
Conductor cross section AWG/kcmil min.	24
Conductor cross section AWG/kcmil max	16
Minimum AWG according to UL/CUL	26
Maximum AWG according to UL/CUL	16

classifications

eCl@ss

eCl@ss 4.0	27141109
eCl@ss 4.1	27141109
eCl@ss 5.0	27141190
eCl@ss 5.1	27141190
eCl@ss 6.0	27261101
eCl@ss 7.0	27440401
eCl@ss 8.0	27440401

ETIM

ETIM 3.0	EC001121
ETIM 4.0	EC002643
ETIM 5.0	EC002643

UNSPSC

UNSPSC 6.01	30211801

PCB connection terminal block - SPTA 1/12-3,5 - 1752201

classifications

UNSPSC

UNSPSC 7.0901	39121432
UNSPSC 11	39121432
UNSPSC 12.01	39121432
UNSPSC 13.2	39121432

approvals

UL Recognized / VDE Gutachten mit Fertigungsüberwachung / cUL Recognized / CCA / IECEE CB Scheme / GOST / GOST / cULus Recognized /

Approval details

UL Recognized

Usegroups	**B**	**D**
Nominal voltage UN	150 V	300 V
Nominal current IN	10 A	10 A
mm²/AWG/kcmil	26-16	26-16

VDE Gutachten mit Fertigungsüberwachung

Nominal voltage UN	130 V
Nominal current IN	9 A
mm²/AWG/kcmil	0.2-1.5

cUL Recognized

Usegroups	**B**	**D**
Nominal voltage UN	150 V	300 V
Nominal current IN	10 A	10 A
mm²/AWG/kcmil	26-16	26-16

CCA

IECEE CB Scheme

PCB connection terminal block - SPTA 1/12-3,5 - 1752201

approvals

GOST

cULus Recognized

Drawings

Drilling diagram

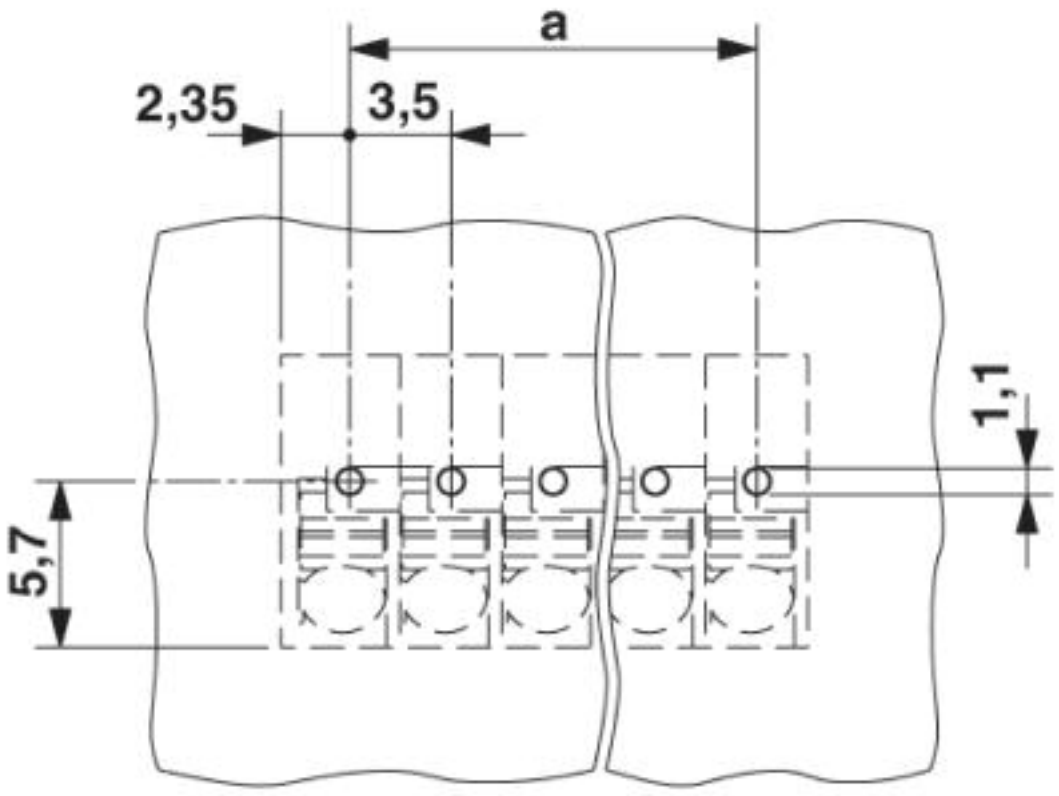

PCB connection terminal block - SPTA 1/12-3,5 - 1752201

Dimensioned drawing

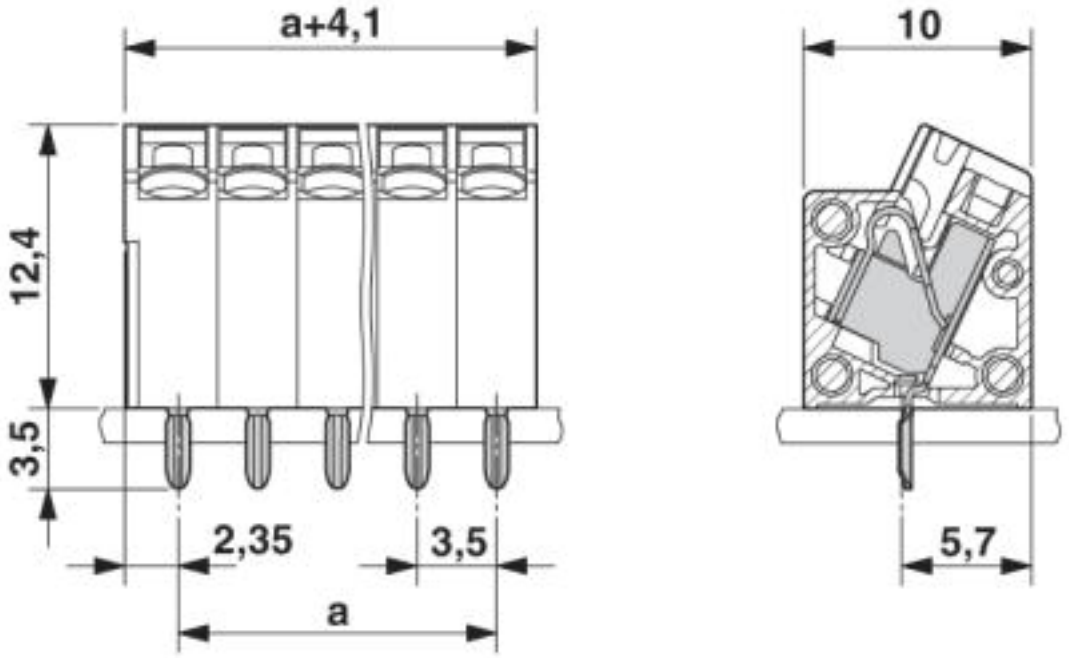

© Phoenix Contact 2013 - all rights reserved
http://www.phoenixcontact.com