PCB terminal block - IDC 0,3/ 8-3,81 - 1706235

Please be informed that the data shown in this PDF Document is generated from our Online Catalog. Please find the complete data in the user's documentation. Our General Terms of Use for Downloads are valid (http://download.phoenixcontact.com)

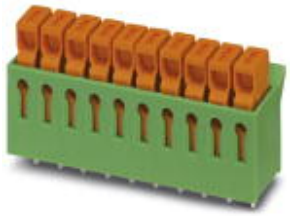

The figure shows a 10-position version of the product

PCB terminal block, Nominal current: 5 A, Nom. voltage: 160 V, Pitch: 3.81 mm, Number of positions: 8, Connection method: Insulation displacement connection QUICKON, Mounting: Soldering, Conductor/PCB connection direction: 0 °, Color: green

Product Features

- The IDC range is suitable for cables with PVC and PE insulation
- Tool-free connection of insulated conductors in a short assembly time
- PCB terminal block with fast insulation displacement connection technology and 3.81 mm pitch
- With a limit frequency of over 100 MHz, the IDC range meets the quality requirements of CAT5 according to EN 50173 and ISO/IEC 11801

Key commercial data

package_quantity	50
GTIN	4017918116736

Technical data

Dimensions

Length	10 mm
Pitch	3.81 mm
Dimension a	26.67 mm
Pin dimensions	1 x 0,4 mm
Hole diameter	1.3 mm

General

Range of articles	IDC 0,3
Insulating material group	I
Rated surge voltage (III/3)	2.5 kV
Rated surge voltage (III/2)	2.5 kV
Rated surge voltage (II/2)	2.5 kV
Rated voltage (III/3)	160 V
Rated voltage (III/2)	160 V
Rated voltage (II/2)	320 V
Connection in acc. with standard	EN-VDE
Nominal current I_N	5 A
Nominal cross section	0.34 mm²

PCB terminal block - IDC 0,3/ 8-3,81 - 1706235

Technical data

General

Maximum load current	5 A (with 0.34 mm² conductor cross section)
Insulating material	PA
Solder pin surface	Sn
Inflammability class according to UL 94	V0
Number of positions	8

Connection data

Conductor cross section solid min.	0.13 mm²
Conductor cross section solid max.	0.34 mm²
Conductor cross section stranded min.	0.22 mm²
Conductor cross section stranded max.	0.34 mm²
Conductor cross section AWG/kcmil min.	26
Conductor cross section AWG/kcmil max	22
Minimum AWG according to UL/CUL	28
Maximum AWG according to UL/CUL	22

classifications

eCl@ss

eCl@ss 4.0	27141109
eCl@ss 4.1	27141109
eCl@ss 5.0	27141190
eCl@ss 5.1	27141190
eCl@ss 6.0	27261101
eCl@ss 7.0	27440401
eCl@ss 8.0	27440401

ETIM

ETIM 3.0	EC001121
ETIM 4.0	EC002643
ETIM 5.0	EC002643

UNSPSC

UNSPSC 6.01	30211801
UNSPSC 7.0901	39121432
UNSPSC 11	39121432
UNSPSC 12.01	39121432
UNSPSC 13.2	39121432

approvals

CSA / UL Recognized / cUL Recognized / GOST / GOST / cULus Recognized /

PCB terminal block - IDC 0,3/ 8-3,81 - 1706235

approvals

Approval details

CSA

Usegroups	B	D
Nominal voltage UN	300 V	300 V
Nominal current IN	5 A	5 A
mm²/AWG/kcmil	28-22	28-22

UL Recognized

Usegroups	B	D
Nominal voltage UN	250 V	300 V
Nominal current IN	5 A	5 A
mm²/AWG/kcmil	28-22	28-22

cUL Recognized

Usegroups	B	D
Nominal voltage UN	250 V	300 V
Nominal current IN	5 A	5 A
mm²/AWG/kcmil	28-22	28-22

GOST

cULus Recognized

accessories

Labeled terminal marker

PCB terminal block - IDC 0,3/ 8-3,81 - 1706235

accessories

SK 3,81/2,8:FORTL.ZAHLEN - 0804109



Drawings

Drilling diagram

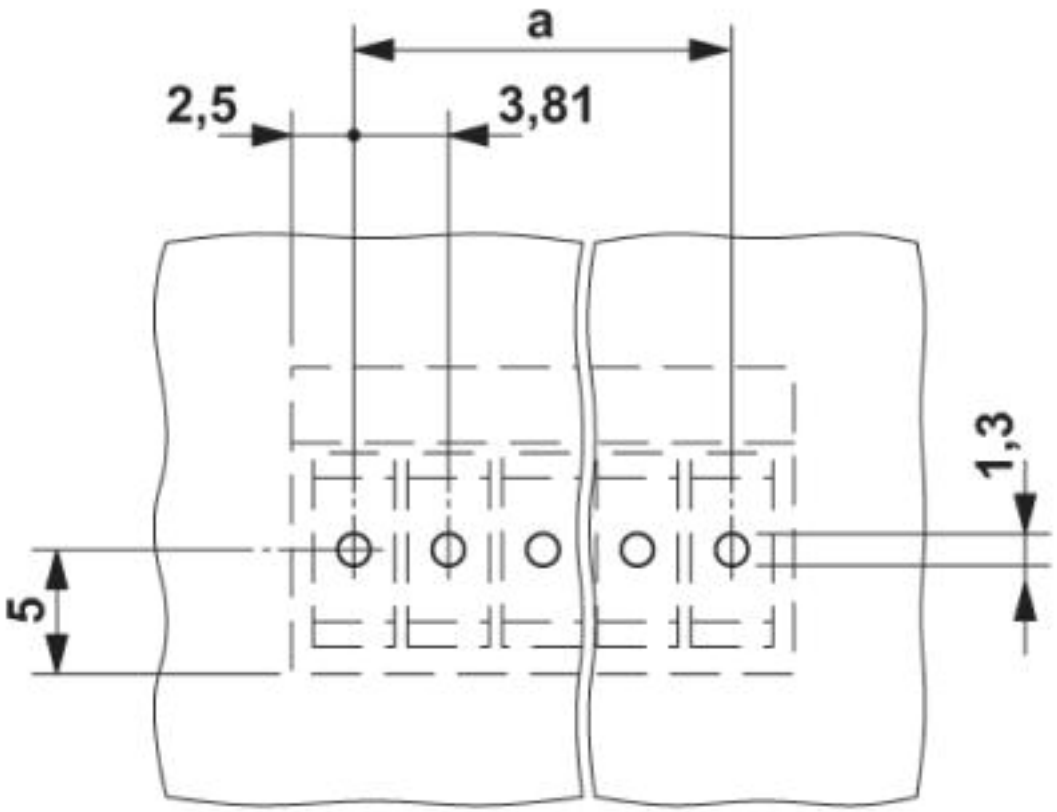

PCB terminal block - IDC 0,3/ 8-3,81 - 1706235

Diagram

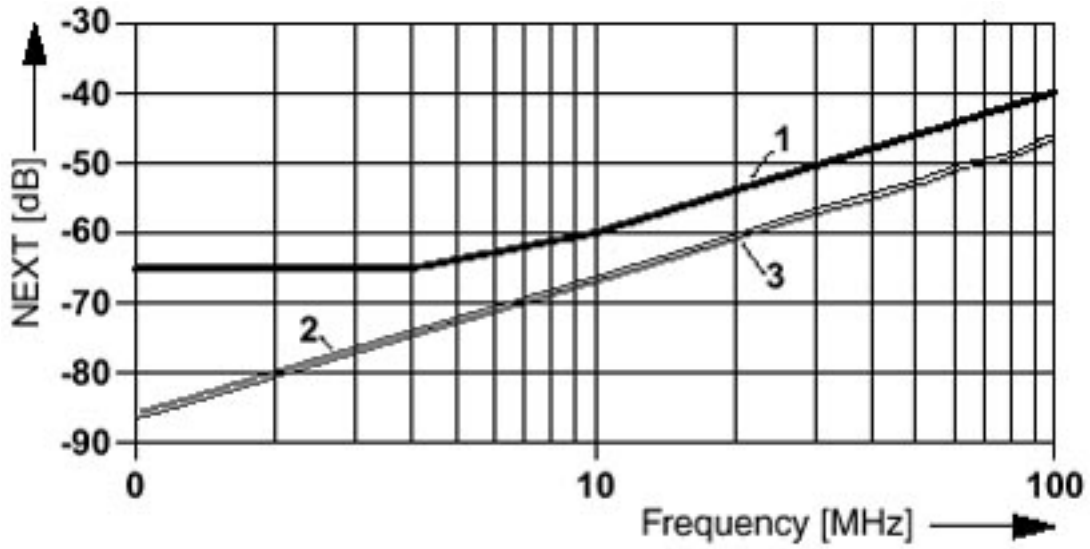

1 = Limit values acc. to EN 50173 for connection technology
2 = NEXT 12-36 on the soldering tag
3 = NEXT 12-36 on the contact terminal block

Diagram

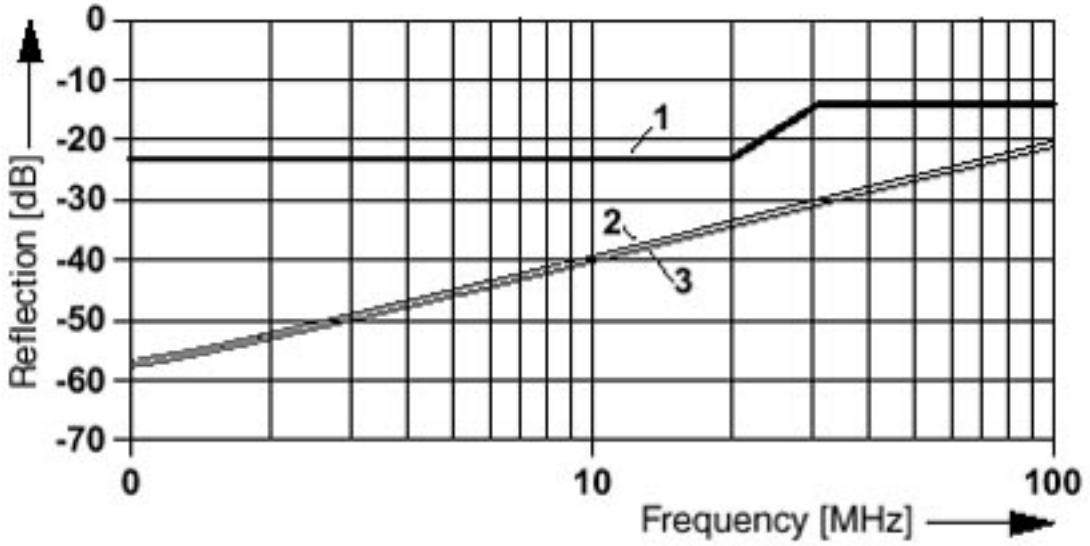

1 = Limit values acc. to EN 50173 for connection technology
2 = NEXT 12 on the soldering tag
3 = NEXT 36 on the soldering tag

PCB terminal block - IDC 0,3/ 8-3,81 - 1706235

Dimensioned drawing

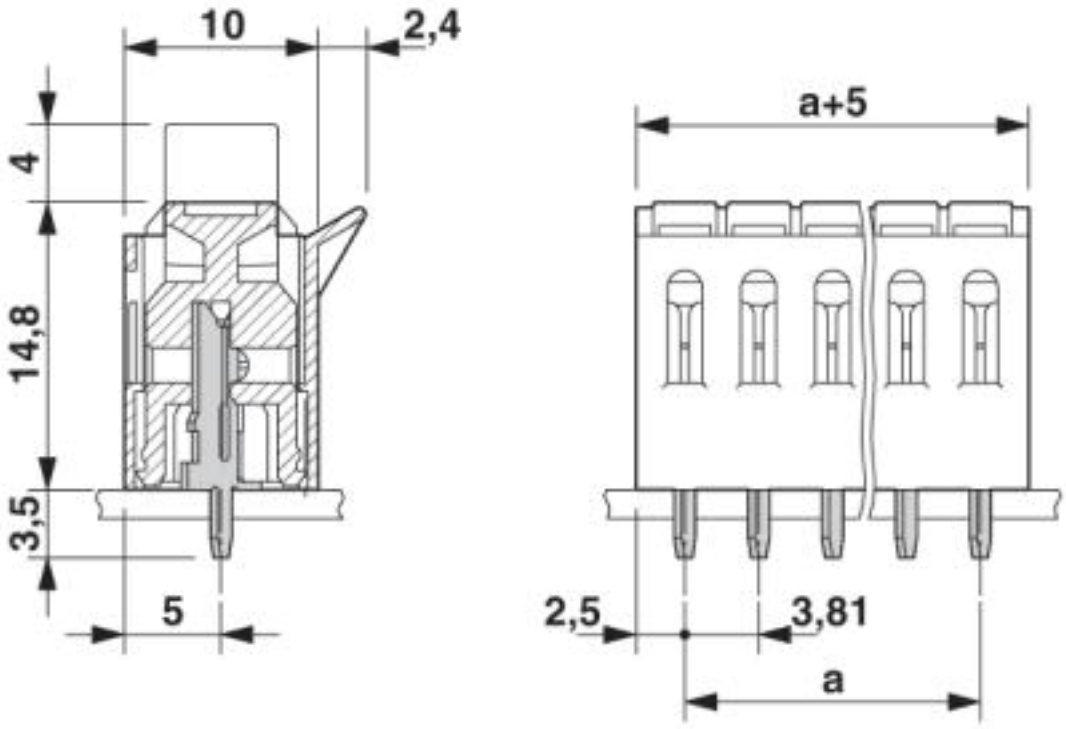

© Phoenix Contact 2013 - all rights reserved
http://www.phoenixcontact.com