Base strip - MCV 1,5/ 8-G-3,81 P26 THRR56 - 1712940

Please be informed that the data shown in this PDF Document is generated from our Online Catalog. Please find the complete data in the user's documentation. Our General Terms of Use for Downloads are valid (http://download.phoenixcontact.com)



Header, Nominal current: 8 A, Rated voltage (III/2): 160 V, Number of positions: 8, Pitch: 3.81 mm, Color: Black, Contact surface: Tin, Assembly: Taped SMD/THT/THR components, User information and design recommendations for through hole reflow technology can be found under “Downloads”

Product Features

- Pitch: 3.5 and 3.81 mm
- Plug-in direction vertical to the PCB
- Low-profile THR headers with compact pitches
- Use in SMT reflow processes

Key commercial data

package_quantity	200
GTIN	4046356093279

Technical data

Dimensions

Length	7.25 mm
Pitch	3.81 mm
Dimension a	26.67 mm
Pin dimensions	0,8 x 0,8 mm
Hole diameter	1.4 mm

General

Range of articles	MCV 1,5/..-G-THR
Insulating material group	IIIa
Rated surge voltage (III/3)	2.5 kV
Rated surge voltage (III/2)	2.5 kV
Rated surge voltage (II/2)	2.5 kV
Rated voltage (III/3)	160 V
Rated voltage (III/2)	160 V
Rated voltage (II/2)	250 V
Connection in acc. with standard	EN-VDE
Nominal current I_N	8 A
Maximum load current	8 A (per position)
Insulating material	LCP
Inflammability class according to UL 94	V0

Base strip - MCV 1,5/ 8-G-3,81 P26 THRR56 - 1712940

Technical data

General

Color	Black
Number of positions	8

classifications

eCl@ss

eCl@ss 4.0	272607xx
eCl@ss 4.1	27260701
eCl@ss 5.0	27260701
eCl@ss 5.1	27260701
eCl@ss 6.0	27260704
eCl@ss 7.0	27440402
eCl@ss 8.0	27440402

ETIM

ETIM 3.0	EC001121
ETIM 4.0	EC002637
ETIM 5.0	EC002637

UNSPSC

UNSPSC 6.01	30211810
UNSPSC 7.0901	39121409
UNSPSC 11	39121409
UNSPSC 12.01	39121409
UNSPSC 13.2	39121409

approvals

UL Recognized / cUL Recognized / GOST / GOST / cULus Recognized /

Approval details

UL Recognized

Usegroups	**B**	**D**
Nominal voltage UN	300 V	300 V
Nominal current IN	8 A	8 A
mm²/AWG/kcmil		

cUL Recognized

Base strip - MCV 1,5/ 8-G-3,81 P26 THRR56 - 1712940

approvals

Usegroups	B	D
Nominal voltage UN	300 V	300 V
Nominal current IN	8 A	8 A
mm²/AWG/kcmil		

GOST

cULus Recognized

Drawings

Drilling diagram

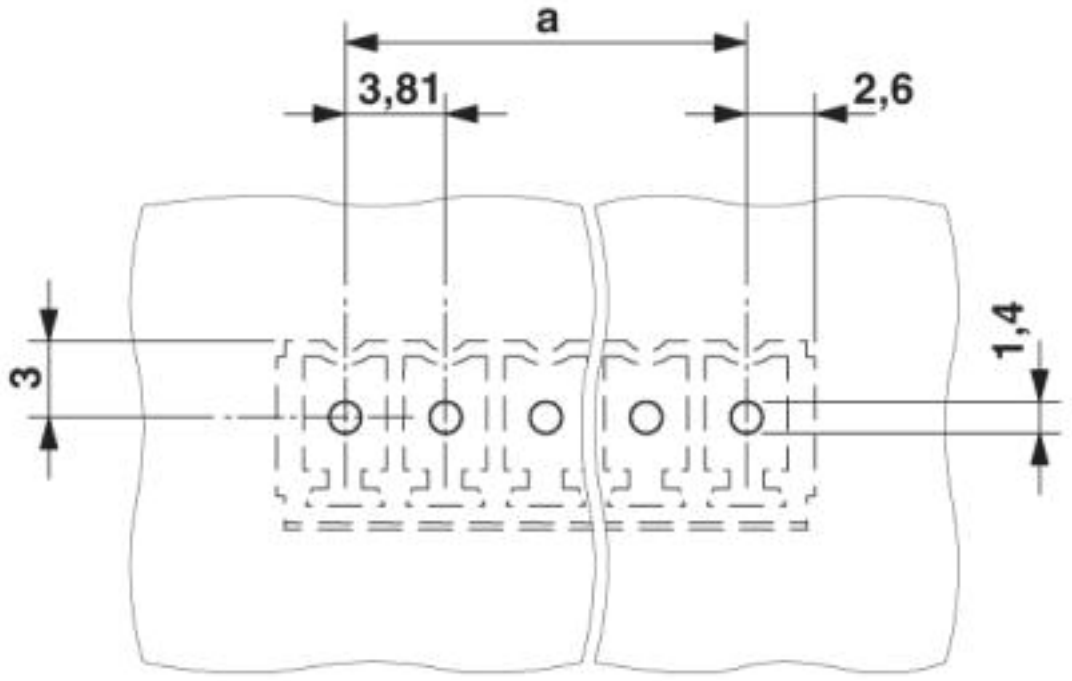

Base strip - MCV 1,5/ 8-G-3,81 P26 THRR56 - 1712940

Dimensioned drawing

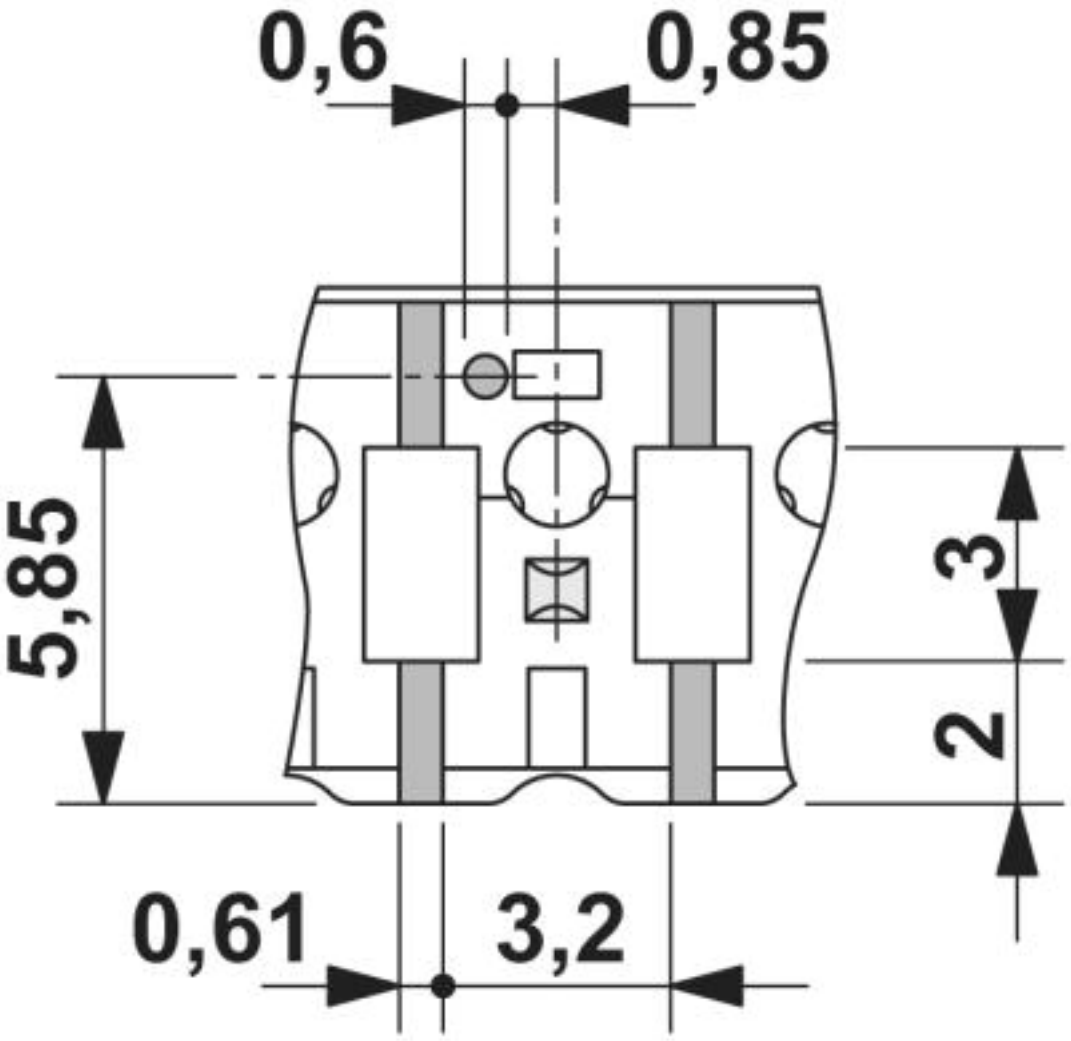

Base strip - MCV 1,5/ 8-G-3,81 P26 THRR56 - 1712940

Dimensioned drawing

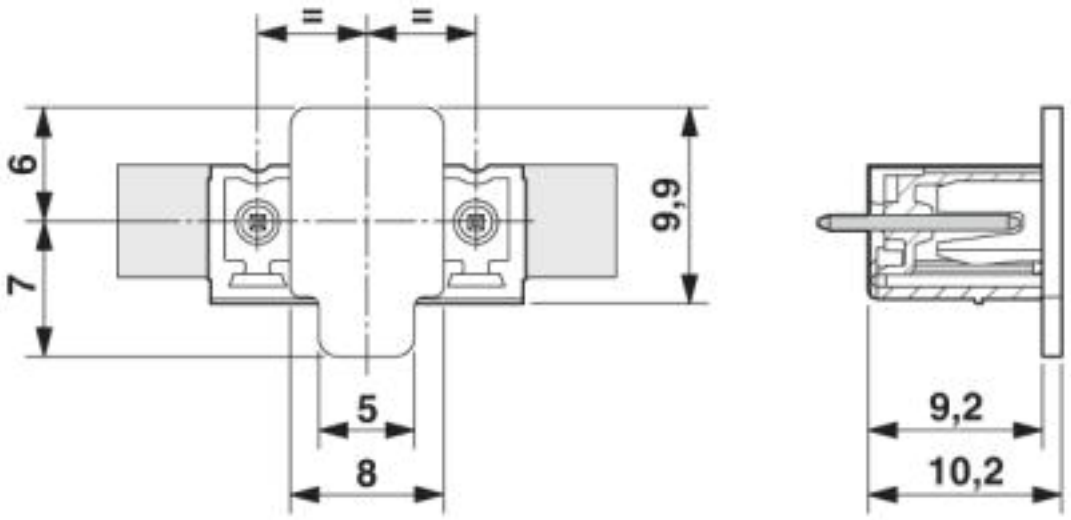

Dimensioned drawing

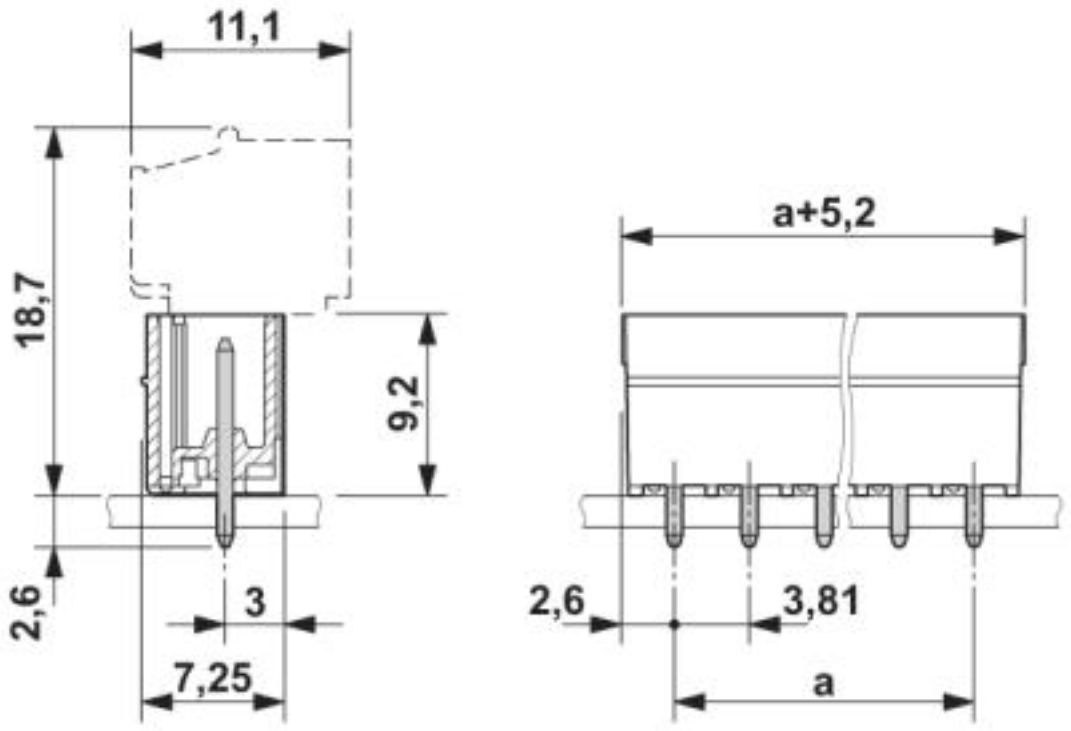

Base strip - MCV 1,5/ 8-G-3,81 P26 THRR56 - 1712940

Dimensioned drawing

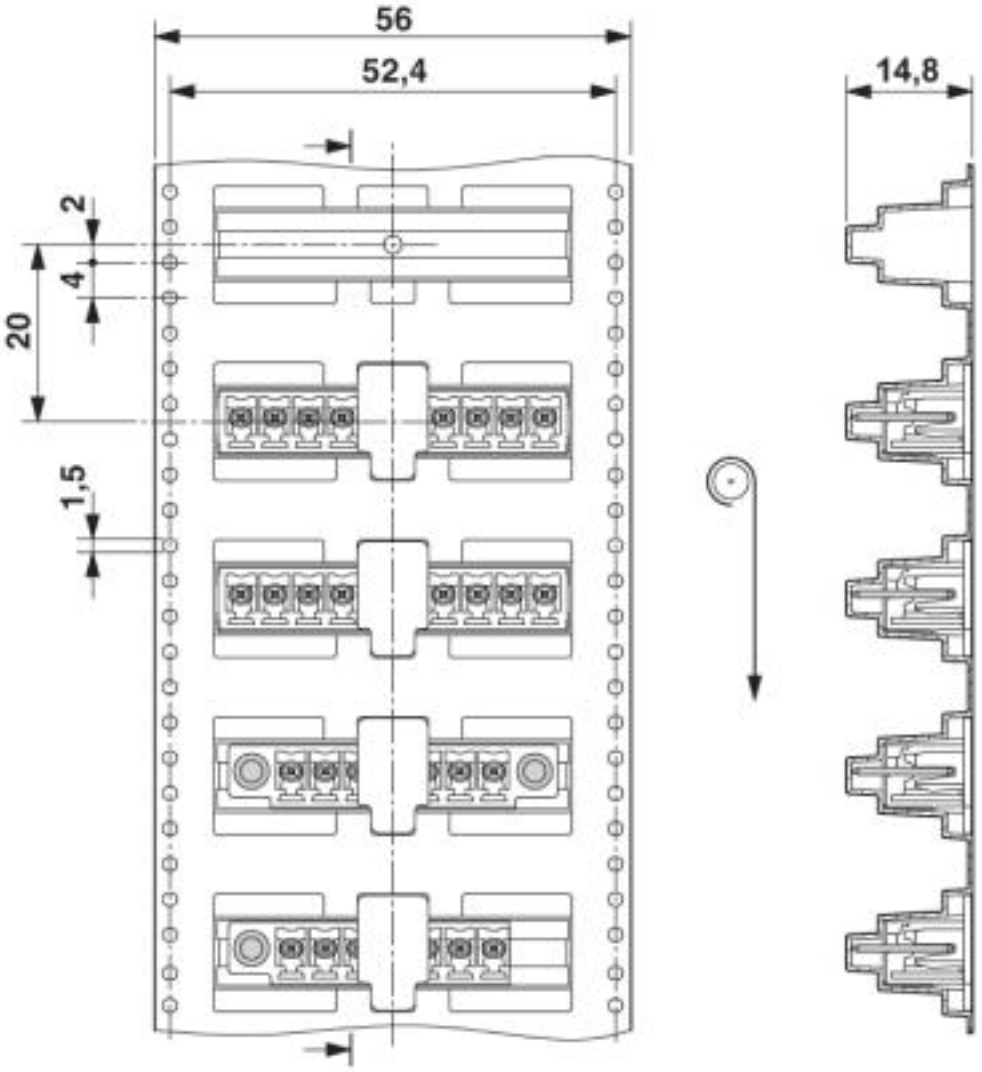

© Phoenix Contact 2013 - all rights reserved
http://www.phoenixcontact.com