Printed-circuit board connector - DMCV 1,5/ 7-G1F-3,5-LR P20THR - 1787441

Please be informed that the data shown in this PDF Document is generated from our Online Catalog. Please find the complete data in the user's documentation. Our General Terms of Use for Downloads are valid (http://download.phoenixcontact.com)



The figure shows a 10-pos. version with 20 contacts

Header, Nominal current: 8 A, Rated voltage (III/2): 160 V, Number of positions: 7, Pitch: 3.5 mm, Color: Black, Contact surface: Tin, Assembly: SMD/THT/THR

Product Features

- Taped headers available on request
- Headers with flange can be combined with plugs with screw flange or with Lock & Release levers
- At 8 mm, the distance from the edge of the PCB to the first row of holes is compatible with MC headers
- Extremely small THR double-level headers for SMT and wave soldering processes

Key commercial data

package_quantity	50
GTIN	4046356597067

Technical data

Dimensions

Length	10.6 mm
Height	12 mm
Pitch	3.5 mm
Dimension a	21 mm
Pin dimensions	0,8 x 0,8 mm
Pin spacing	5.50 mm
Hole diameter	1.4 mm

General

Range of articles	DMCV 1,5/..-G1F-THR
Insulating material group	IIIa
Rated surge voltage (III/3)	2.5 kV
Rated surge voltage (III/2)	2.5 kV
Rated surge voltage (II/2)	2.5 kV
Rated voltage (III/3)	160 V
Rated voltage (III/2)	160 V
Rated voltage (II/2)	250 V

Printed-circuit board connector - DMCV 1,5/ 7-G1F-3,5-LR P20THR - 1787441

Technical data

General

Connection in acc. with standard	EN-VDE
Nominal current I_N	8 A
Maximum load current	8 A
Insulating material	LCP
Inflammability class according to UL 94	V0
Color	Black
Number of positions	7

classifications

eCl@ss

eCl@ss 4.0	272607xx
eCl@ss 4.1	27260701
eCl@ss 5.0	27260701
eCl@ss 5.1	27260701
eCl@ss 6.0	27260704
eCl@ss 7.0	27440402
eCl@ss 8.0	27440402

ETIM

ETIM 4.0	EC002637
ETIM 5.0	EC002637

UNSPSC

UNSPSC 6.01	30211810
UNSPSC 7.0901	39121409
UNSPSC 11	39121409
UNSPSC 12.01	39121409
UNSPSC 13.2	39121409

approvals

UL Recognized / cUL Recognized / VDE Gutachten mit Fertigungsüberwachung / IECEE CB Scheme / cULus Recognized /

Approval details

UL Recognized

Usegroups	**B**	**C**
Nominal voltage UN	150 V	50 V

Printed-circuit board connector - DMCV 1,5/ 7-G1F-3,5-LR P20THR - 1787441

approvals

Usegroups	B	C
Nominal current IN	8 A	8 A
mm²/AWG/kcmil		

cUL Recognized

Usegroups	B	C
Nominal voltage UN	150 V	50 V
Nominal current IN	8 A	8 A
mm²/AWG/kcmil		

VDE Gutachten mit Fertigungsüberwachung

Nominal voltage UN	160 V
Nominal current IN	8 A
mm²/AWG/kcmil	

IECEE CB Scheme

Nominal voltage UN	160 V
Nominal current IN	8 A
mm²/AWG/kcmil	

cULus Recognized

accessories

Coding element

CP-DMC 1,5-THR NAT - 1790647



Printed-circuit board connector - DMCV 1,5/ 7-G1F-3,5-LR P20THR - 1787441

Drawings

Drilling diagram

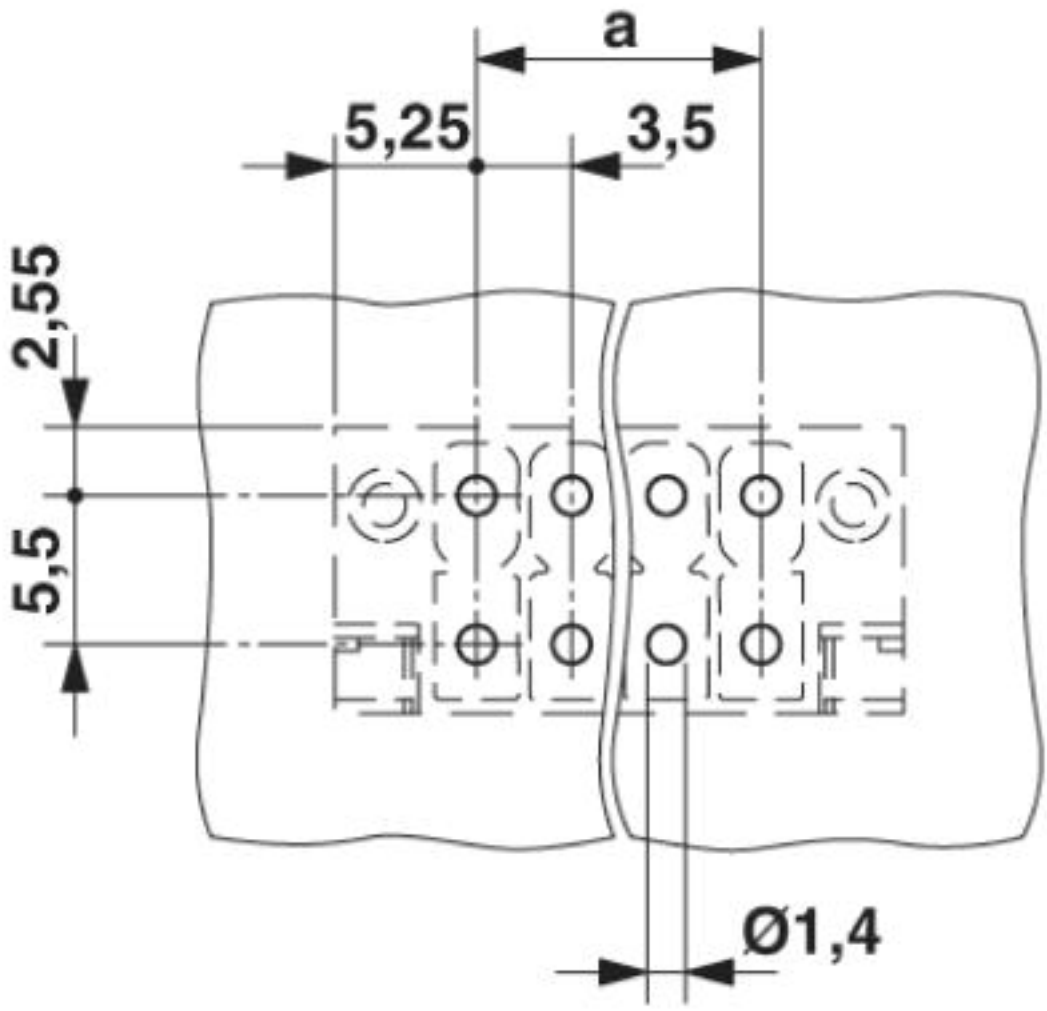

Printed-circuit board connector - DMCV 1,5/ 7-G1F-3,5-LR P20THR - 1787441

Diagram

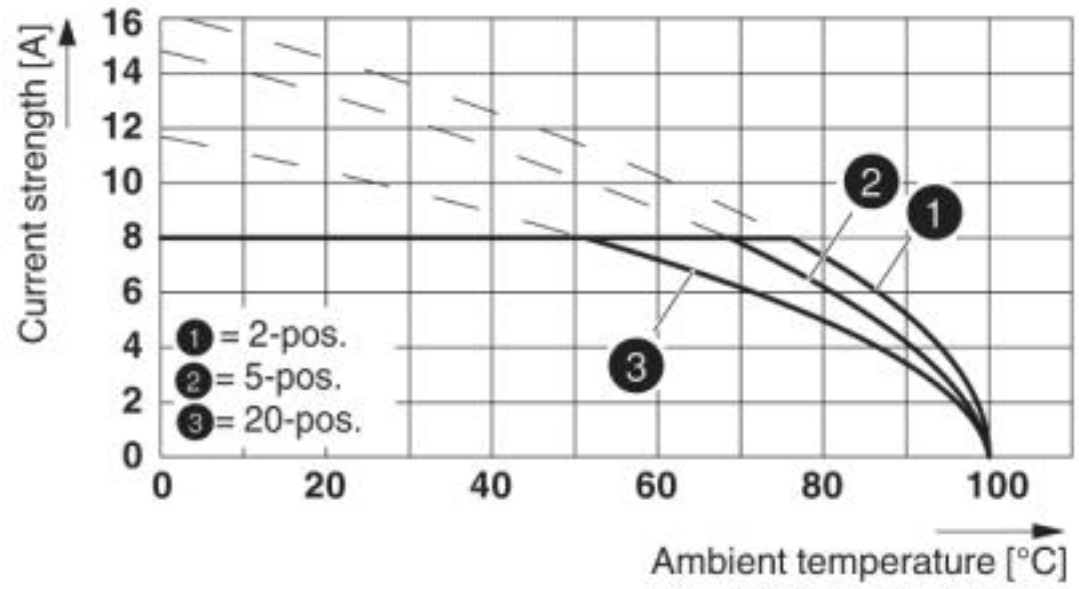

Dimensioned drawing

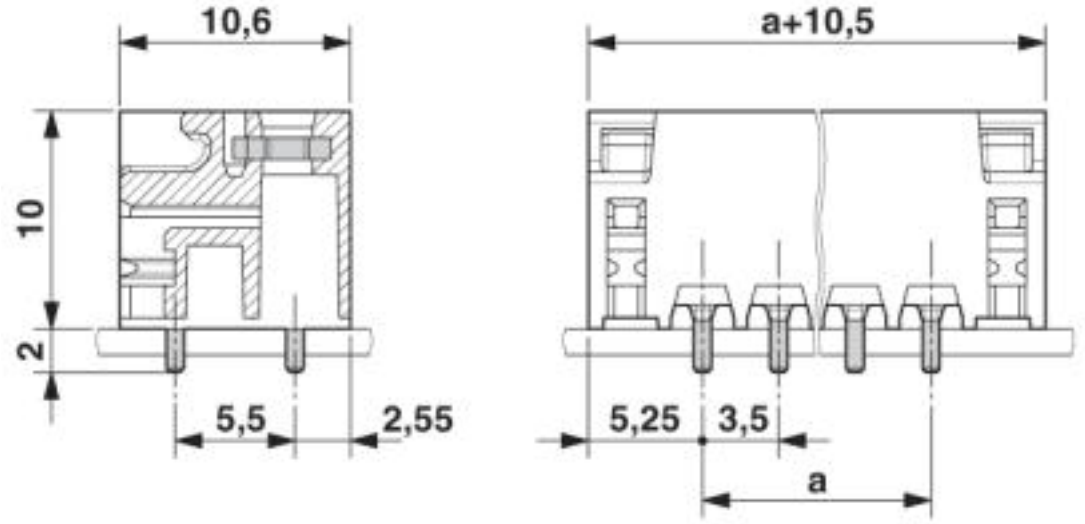

Printed-circuit board connector - DMCV 1,5/ 7-G1F-3,5-LR P20THR - 1787441

Schematic diagram

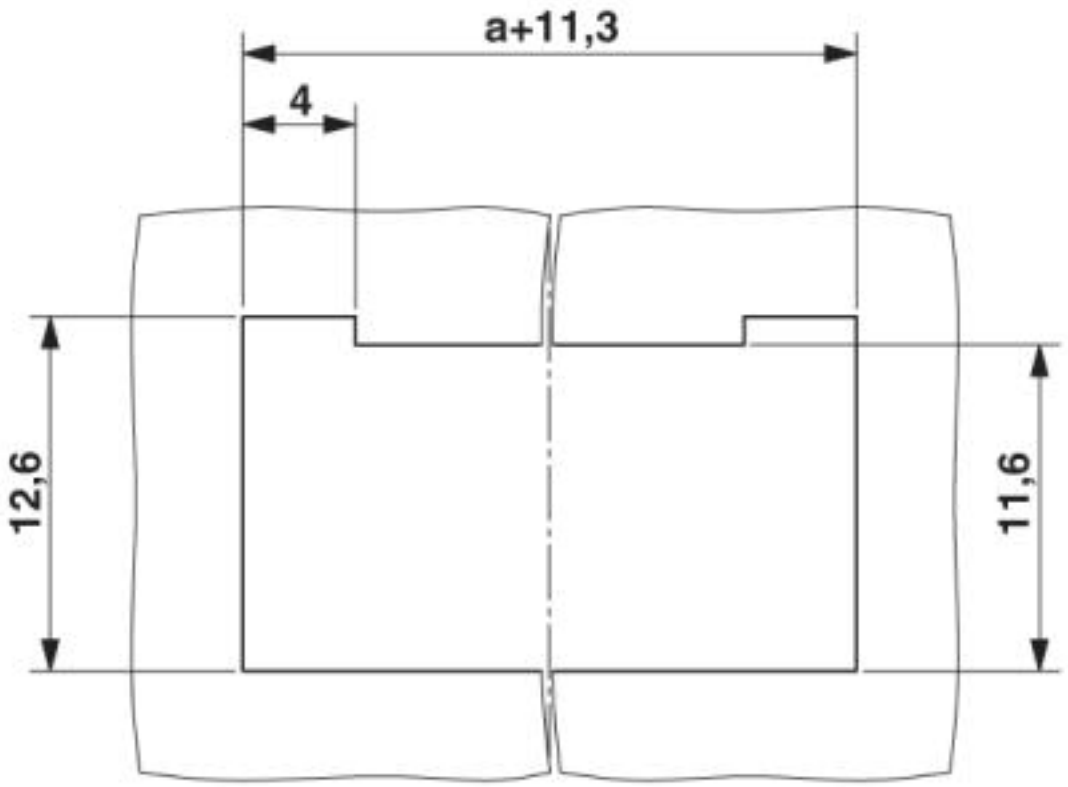

Panel cutout

Printed-circuit board connector - DMCV 1,5/ 7-G1F-3,5-LR P20THR - 1787441

Schematic diagram

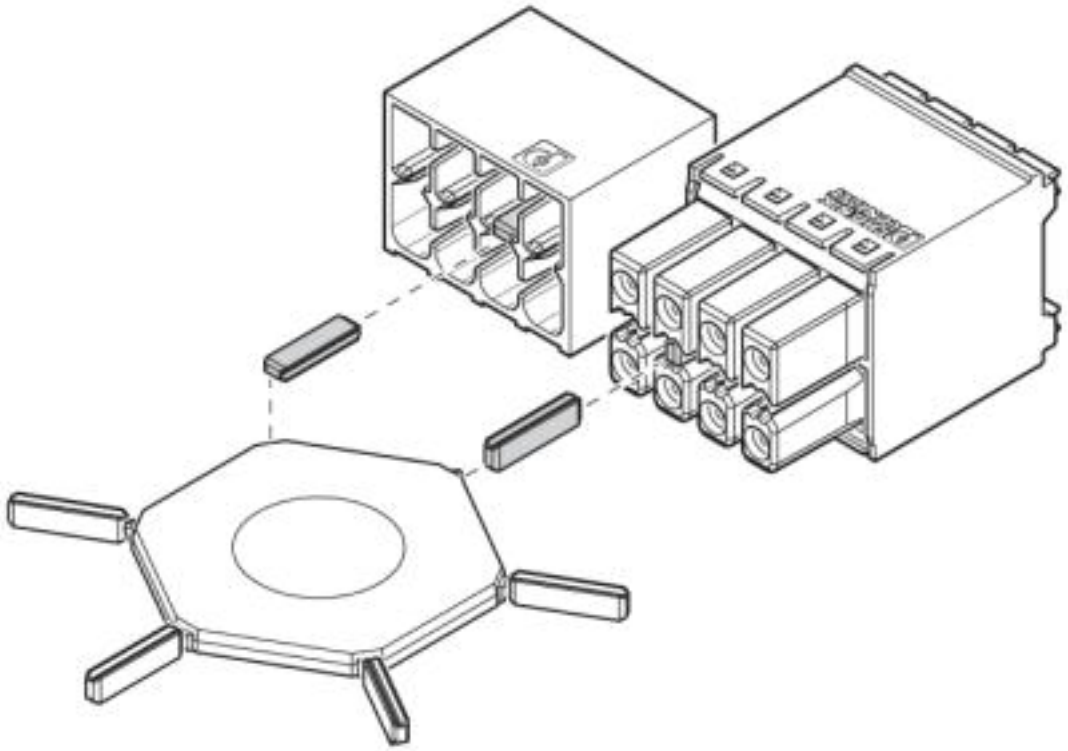

Use of the CP-DMC... coding profile

© Phoenix Contact 2013 - all rights reserved
http://www.phoenixcontact.com