# Printed-circuit board connector - DMCV 1,5/ 4-G1-3,5 P20THR - 1787221

Please be informed that the data shown in this PDF Document is generated from our Online Catalog. Please find the complete data in the user's documentation. Our General Terms of Use for Downloads are valid (http://download.phoenixcontact.com)



The figure shows a 10-pos. version with 20 contacts

Header, Nominal current: 8 A, Rated voltage (III/2): 160 V, Number of positions: 4, Pitch: 3.5 mm, Color: Black, Contact surface: Tin, Assembly: SMD/THT/THR

## Product Features

- Taped headers available on request
- Headers with flange can be combined with plugs with screw flange or with Lock & Release levers
- At 8 mm, the distance from the edge of the PCB to the first row of holes is compatible with MC headers
- Extremely small THR double-level headers for SMT and wave soldering processes

## Key commercial data

| | |
|---|---|
| **package_quantity** | 50 |
| **GTIN** | 4046356596848 |

## Technical data

### Dimensions

| | |
|---|---|
| **Length** | 10.6 mm |
| **Height** | 12 mm |
| **Pitch** | 3.5 mm |
| **Dimension a** | 10.5 mm |
| **Pin dimensions** | 0,8 x 0,8 mm |
| **Pin spacing** | 5.50 mm |
| **Hole diameter** | 1.4 mm |

### General

| | |
|---|---|
| **Range of articles** | DMCV 1,5/..-G1-THR |
| **Insulating material group** | IIIa |
| **Rated surge voltage (III/3)** | 2.5 kV |
| **Rated surge voltage (III/2)** | 2.5 kV |
| **Rated surge voltage (II/2)** | 2.5 kV |
| **Rated voltage (III/3)** | 160 V |
| **Rated voltage (III/2)** | 160 V |
| **Rated voltage (II/2)** | 250 V |

# Printed-circuit board connector - DMCV 1,5/ 4-G1-3,5 P20THR - 1787221

## Technical data

### General

| | |
|---|---|
| **Connection in acc. with standard** | EN-VDE |
| **Nominal current $I_N$** | 8 A |
| **Maximum load current** | 8 A |
| **Insulating material** | LCP |
| **Inflammability class according to UL 94** | V0 |
| **Color** | Black |
| **Number of positions** | 4 |

## classifications

### eCl@ss

| | |
|---|---|
| **eCl@ss 4.0** | 272607xx |
| **eCl@ss 4.1** | 27260701 |
| **eCl@ss 5.0** | 27260701 |
| **eCl@ss 5.1** | 27260701 |
| **eCl@ss 6.0** | 27260704 |
| **eCl@ss 7.0** | 27440402 |
| **eCl@ss 8.0** | 27440402 |

### ETIM

| | |
|---|---|
| **ETIM 4.0** | EC002637 |
| **ETIM 5.0** | EC002637 |

### UNSPSC

| | |
|---|---|
| **UNSPSC 6.01** | 30211810 |
| **UNSPSC 7.0901** | 39121409 |
| **UNSPSC 11** | 39121409 |
| **UNSPSC 12.01** | 39121409 |
| **UNSPSC 13.2** | 39121409 |

## approvals

UL Recognized / cUL Recognized / VDE Gutachten mit Fertigungsüberwachung / IECEE CB Scheme / cULus Recognized /

### Approval details

**UL Recognized**

| **Usegroups** | **B** | **C** |
|---|---|---|
| Nominal voltage UN | 150 V | 50 V |

# Printed-circuit board connector - DMCV 1,5/ 4-G1-3,5 P20THR - 1787221

## approvals

| Usegroups | B | C |
|---|---|---|
| Nominal current IN | 8 A | 8 A |
| mm²/AWG/kcmil | | |

**cUL Recognized**

| Usegroups | B | C |
|---|---|---|
| Nominal voltage UN | 150 V | 50 V |
| Nominal current IN | 8 A | 8 A |
| mm²/AWG/kcmil | | |

**VDE Gutachten mit Fertigungsüberwachung**

| | |
|---|---|
| Nominal voltage UN | 160 V |
| Nominal current IN | 8 A |
| mm²/AWG/kcmil | |

**IECEE CB Scheme**

| | |
|---|---|
| Nominal voltage UN | 160 V |
| Nominal current IN | 8 A |
| mm²/AWG/kcmil | |

**cULus Recognized**

## accessories

### Coding element

CP-DMC 1,5-THR NAT - 1790647



# Printed-circuit board connector - DMCV 1,5/ 4-G1-3,5 P20THR - 1787221

## Drawings

Drilling diagram

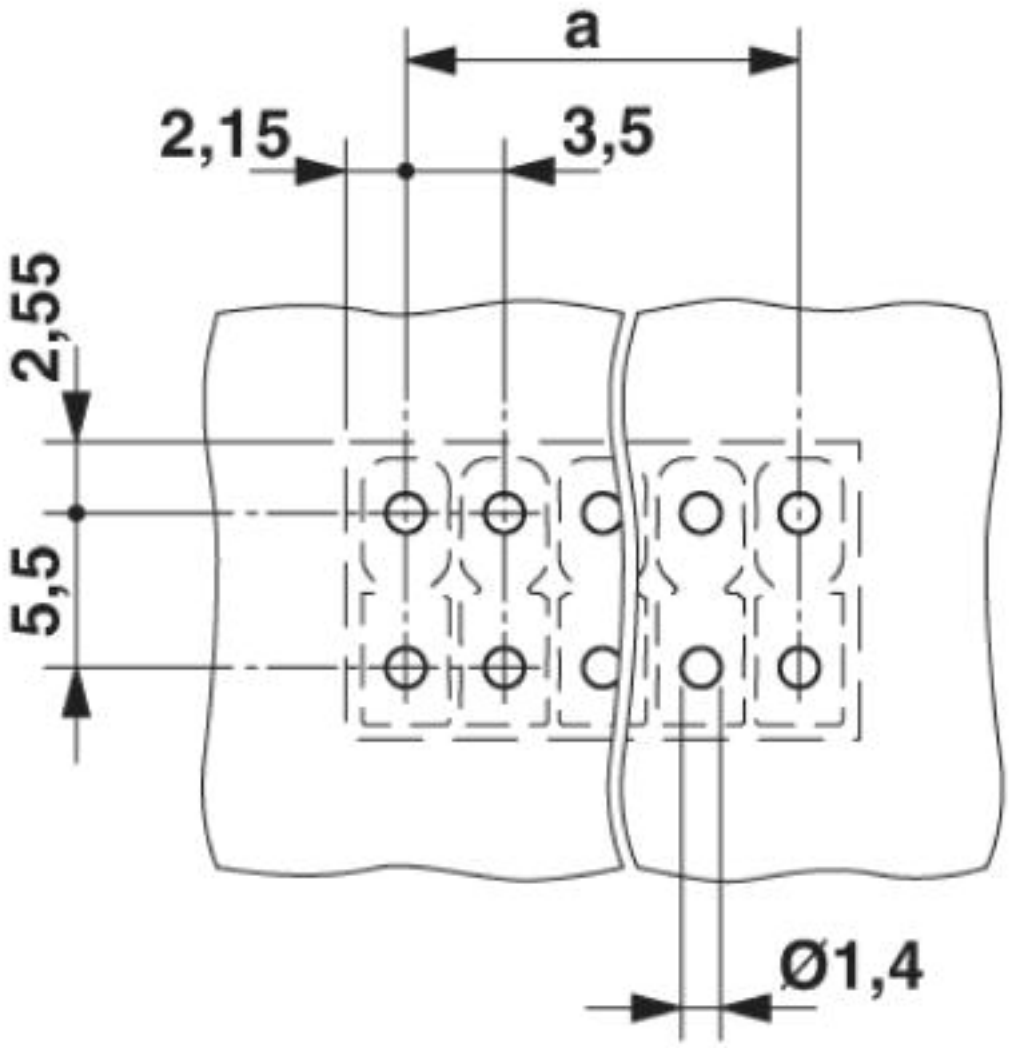

# Printed-circuit board connector - DMCV 1,5/ 4-G1-3,5 P20THR - 1787221

Diagram

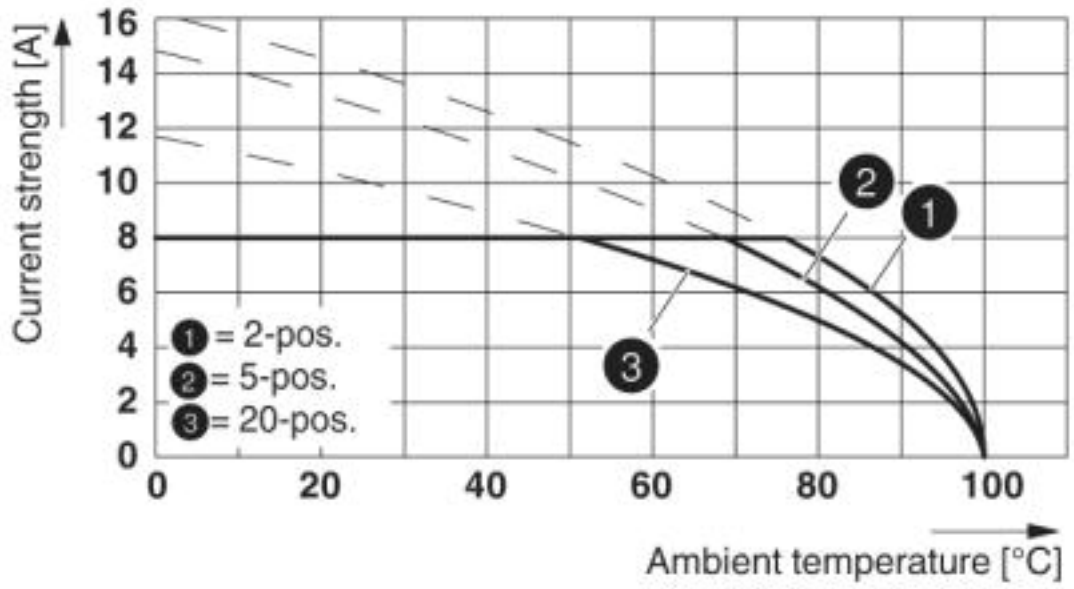


Dimensioned drawing

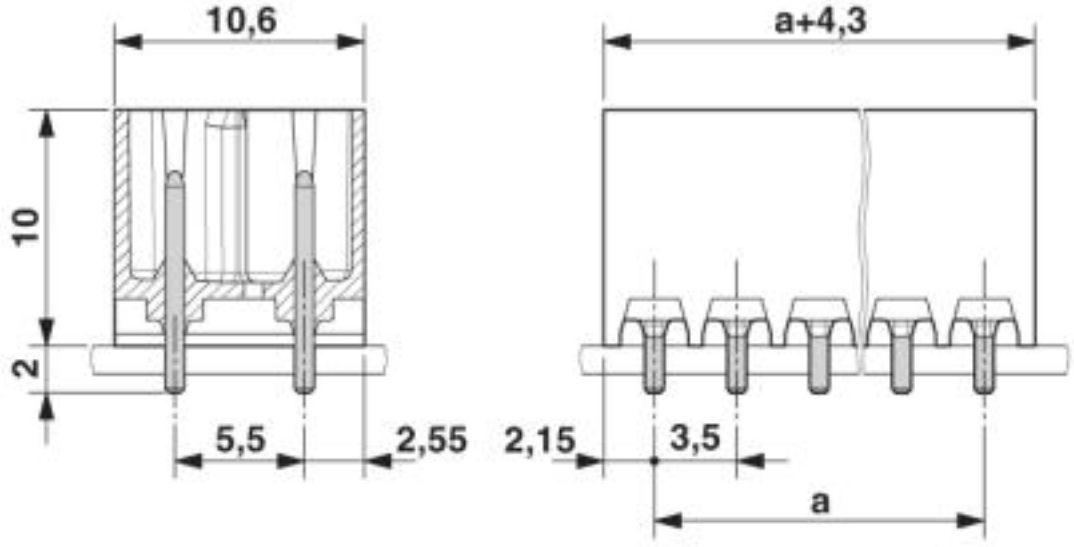

# Printed-circuit board connector - DMCV 1,5/ 4-G1-3,5 P20THR - 1787221

Schematic diagram

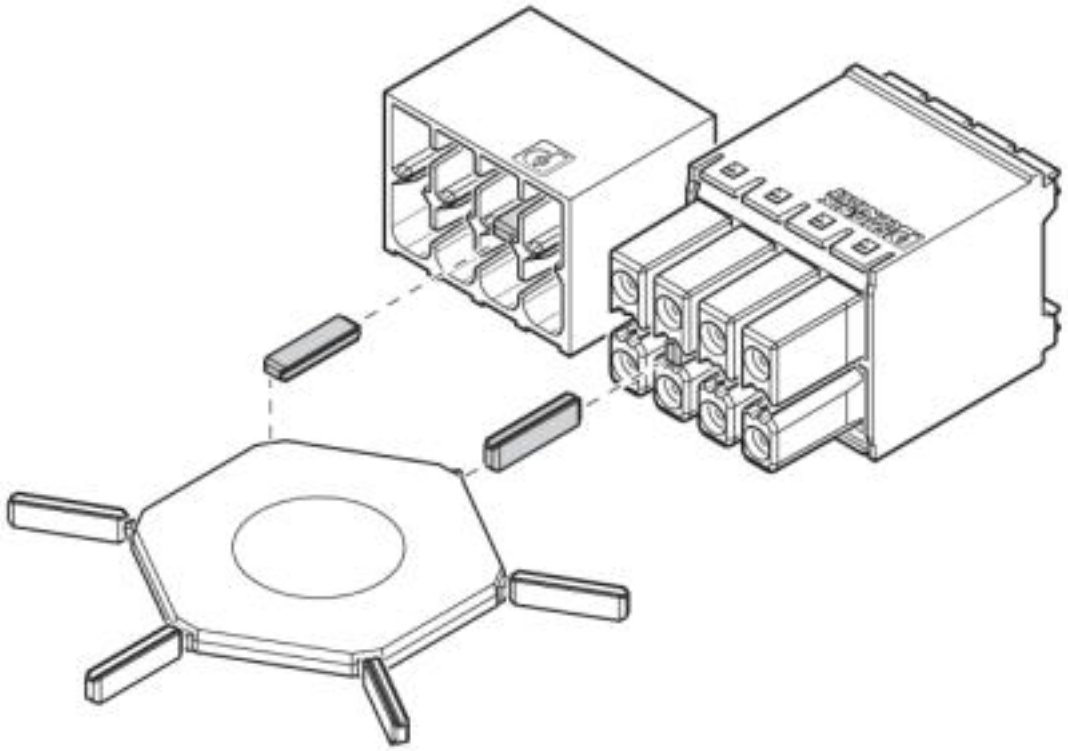

Use of the CP-DMC... coding profile

© Phoenix Contact 2013 - all rights reserved
http://www.phoenixcontact.com