# Printed-circuit board connector - FK-MCP 1,5/ 8-STF-3,81 - 1851290

Please be informed that the data shown in this PDF Document is generated from our Online Catalog. Please find the complete data in the user's documentation. Our General Terms of Use for Downloads are valid (http://download.phoenixcontact.com)



The figure shows a 10-position version of the product

Plug component, Nominal current: 8 A, Rated voltage (III/2): 160 V, Number of positions: 8, Pitch: 3.81 mm, Connection method: Spring-cage conn., Color: green, Contact surface: Tin

## Product Features

- User-friendly actuation of the terminal point using a screwdriver
- Fast conductor connection thanks to Push-in spring-cage connection
- Test connection for accommodating 1.2 mm Ø test pins or 1 mm Ø test plugs
- Wide range of possible combinations with MC base strips with 3.5/3.81 mm pitch

## Key commercial data

| | |
|---|---|
| **package_quantity** | 50 |
| **GTIN** | 4017918110109 |

## Technical data

### Dimensions

| | |
|---|---|
| **Pitch** | 3.81 mm |
| **Dimension a** | 26.67 mm |

### General

| | |
|---|---|
| **Range of articles** | FK-MCP 1,5/..-STF |
| **Insulating material group** | I |
| **Rated surge voltage (III/3)** | 2.5 kV |
| **Rated surge voltage (III/2)** | 2.5 kV |
| **Rated surge voltage (II/2)** | 2.5 kV |
| **Rated voltage (III/3)** | 160 V |
| **Rated voltage (III/2)** | 160 V |
| **Rated voltage (II/2)** | 320 V |
| **Connection in acc. with standard** | EN-VDE |
| **Nominal current $I_N$** | 8 A |
| **Nominal cross section** | 1.5 mm² |
| **Maximum load current** | 8 A (with 1.5 mm² conductor cross section) |
| **Insulating material** | PA |

# Printed-circuit board connector - FK-MCP 1,5/ 8-STF-3,81 - 1851290

## Technical data

### General

| | |
|---|---|
| **Inflammability class according to UL 94** | V0 |
| **Internal cylindrical gage** | A1 |
| **Stripping length** | 9 mm |
| **Number of positions** | 8 |

### Connection data

| | |
|---|---|
| **Conductor cross section solid min.** | 0.14 mm² |
| **Conductor cross section solid max.** | 1.5 mm² |
| **Conductor cross section stranded min.** | 0.14 mm² |
| **Conductor cross section stranded max.** | 1.5 mm² |
| **Conductor cross section stranded, with ferrule without plastic sleeve min.** | 0.25 mm² |
| **Conductor cross section stranded, with ferrule without plastic sleeve max.** | 1.5 mm² |
| **Conductor cross section stranded, with ferrule with plastic sleeve min.** | 0.25 mm² |
| **Conductor cross section stranded, with ferrule with plastic sleeve max.** | 0.5 mm² |
| **Conductor cross section AWG/kcmil min.** | 26 |
| **Conductor cross section AWG/kcmil max** | 16 |
| **Minimum AWG according to UL/CUL** | 28 |
| **Maximum AWG according to UL/CUL** | 16 |

## classifications

### eCl@ss

| | |
|---|---|
| **eCl@ss 4.0** | 272607xx |
| **eCl@ss 4.1** | 27260701 |
| **eCl@ss 5.0** | 27260701 |
| **eCl@ss 5.1** | 27260701 |
| **eCl@ss 6.0** | 27260704 |
| **eCl@ss 7.0** | 27440402 |
| **eCl@ss 8.0** | 27440402 |

### ETIM

| | |
|---|---|
| **ETIM 3.0** | EC001121 |
| **ETIM 4.0** | EC002638 |
| **ETIM 5.0** | EC002638 |

### UNSPSC

| | |
|---|---|
| **UNSPSC 6.01** | 30211810 |
| **UNSPSC 7.0901** | 39121409 |
| **UNSPSC 11** | 39121409 |

# Printed-circuit board connector - FK-MCP 1,5/ 8-STF-3,81 - 1851290

## classifications

### UNSPSC

| | |
|---|---|
| **UNSPSC 12.01** | 39121409 |
| **UNSPSC 13.2** | 39121409 |

## approvals

CSA / UL Recognized / VDE Gutachten mit Fertigungsüberwachung / cUL Recognized / GOST / IECEE CB Scheme / GOST / CCA / cULus Recognized /

### Approval details

**CSA**

| **Usegroups** | **B** | **D** |
|---|---|---|
| Nominal voltage UN | 300 V | 300 V |
| Nominal current IN | 8 A | 8 A |
| mm²/AWG/kcmil | 28-16 | 28-16 |

**UL Recognized**

| **Usegroups** | **B** |
|---|---|
| Nominal voltage UN | 300 V |
| Nominal current IN | 8 A |
| mm²/AWG/kcmil | 28-16 |

**VDE Gutachten mit Fertigungsüberwachung**

| | |
|---|---|
| Nominal voltage UN | 160 V |
| Nominal current IN | 8 A |
| mm²/AWG/kcmil | 0.2-1.5 |

**cUL Recognized**

| **Usegroups** | **B** |
|---|---|
| Nominal voltage UN | 300 V |
| Nominal current IN | 8 A |
| mm²/AWG/kcmil | 28-16 |

# Printed-circuit board connector - FK-MCP 1,5/ 8-STF-3,81 - 1851290

## approvals

**GOST**

**IECEE CB Scheme**

| | |
|---|---|
| Nominal voltage UN | 160 V |
| Nominal current IN | 8 A |
| mm²/AWG/kcmil | 0.2-1.5 |

| **CCA** | |
|---|---|
| Nominal voltage UN | 160 V |
| Nominal current IN | 8 A |
| mm²/AWG/kcmil | 0.2-1.5 |

**cULus Recognized**

## accessories

**Screwdriver tools**

SZS 0,4X2,5 VDE - 1205037



**Labeled terminal marker**

# Printed-circuit board connector - FK-MCP 1,5/ 8-STF-3,81 - 1851290

accessories

SK 3,81/2,8:FORTL.ZAHLEN - 0804109



## Drawings

Diagram

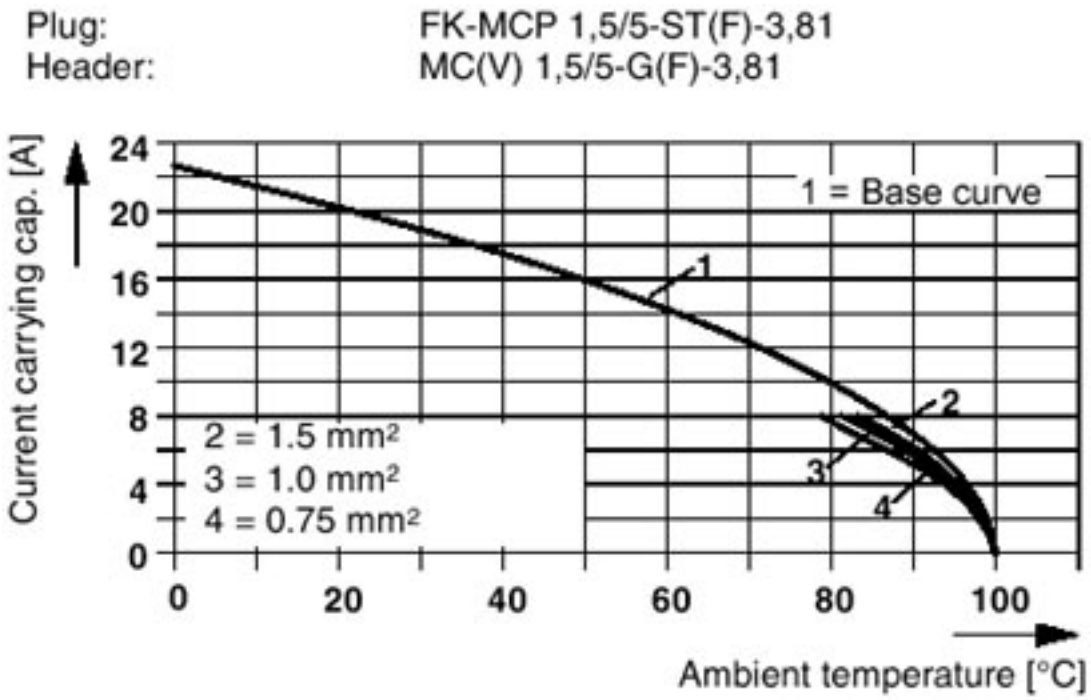

# Printed-circuit board connector - FK-MCP 1,5/ 8-STF-3,81 - 1851290

Diagram

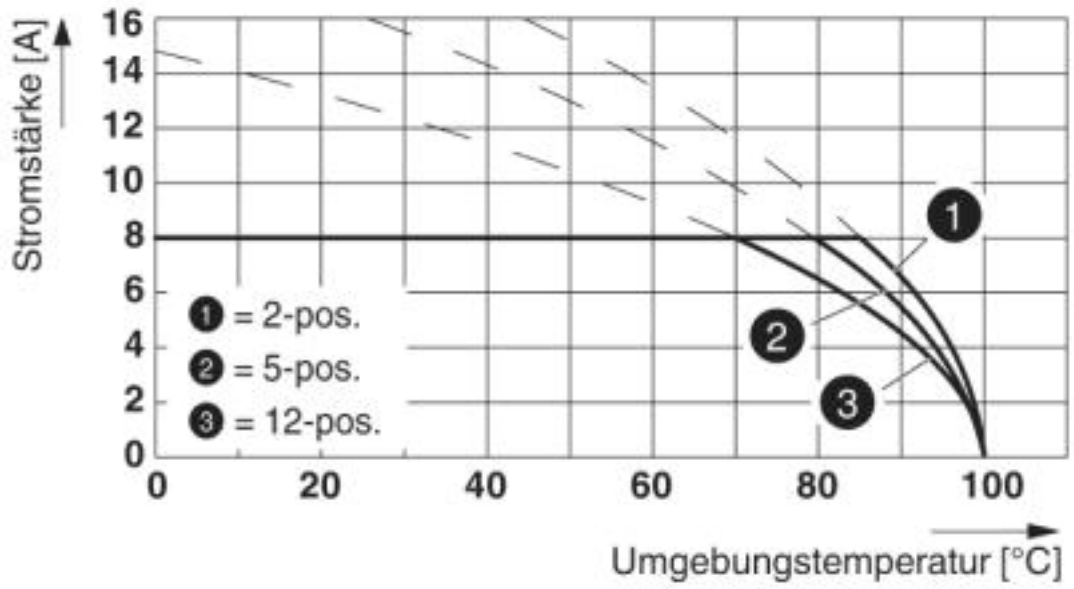


Type: FK-MCP 1,5/...-STF-3,81 with MC 1,5/...-GF-3,81 P... THR

Dimensioned drawing

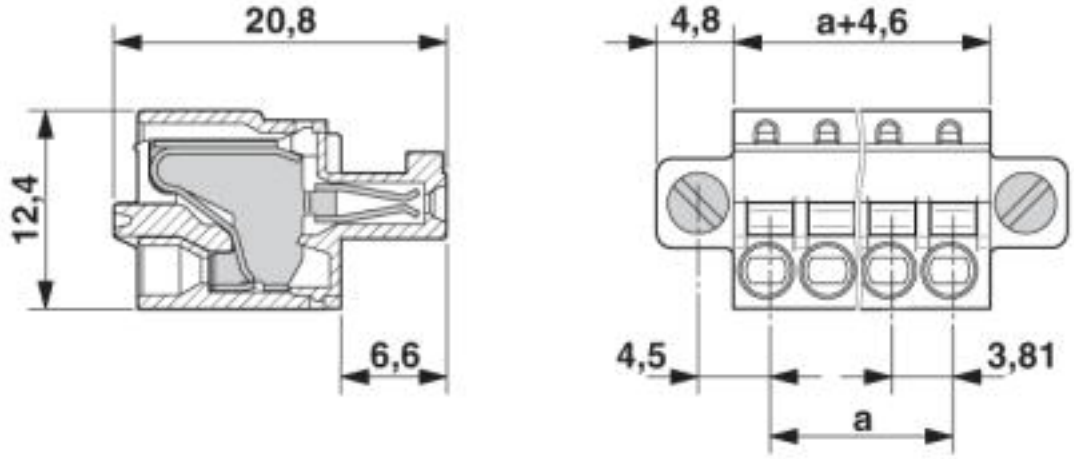


© Phoenix Contact 2013 - all rights reserved
http://www.phoenixcontact.com