Base strip - MCD 1,5/ 6-G-3,81 - 1829992

Please be informed that the data shown in this PDF Document is generated from our Online Catalog. Please find the complete data in the user's documentation. Our General Terms of Use for Downloads are valid (http://download.phoenixcontact.com)



The figure shows a 10-pos. version with 20 contacts

Header, Nominal current: 8 A, Rated voltage (III/2): 160 V, Number of positions: 6, Pitch: 3.81 mm, Color: green, Contact surface: Tin, Assembly: Soldering, In combination with MCV plug components, both an MCVW and an MCVR plug must be used.

Product Features

- With offset levels
- Low-profile double-level pin strips with high contact density
- Improved view and access to lower level
- Plug-in direction parallel to the PCB

Key commercial data

package_quantity	50
GTIN	4017918113704

Technical data

Dimensions

Length	21.9 mm
Pitch	3.81 mm
Dimension a	19.05 mm
Pin dimensions	0,8 x 0,8 mm
Hole diameter	1.2 mm

General

Range of articles	MCD 1,5/..-G
Insulating material group	I
Rated surge voltage (III/3)	2.5 kV
Rated surge voltage (III/2)	2.5 kV
Rated surge voltage (II/2)	2.5 kV
Rated voltage (III/3)	160 V
Rated voltage (III/2)	160 V
Rated voltage (II/2)	250 V
Connection in acc. with standard	EN-VDE
Nominal current I_N	8 A
Maximum load current	8 A
Insulating material	PA

Base strip - MCD 1,5/ 6-G-3,81 - 1829992

Technical data

General

Inflammability class according to UL 94	V0
Color	green
Number of positions	6

classifications

eCl@ss

eCl@ss 4.0	272607xx
eCl@ss 4.1	27260701
eCl@ss 5.0	27260701
eCl@ss 5.1	27260701
eCl@ss 6.0	27260704
eCl@ss 7.0	27440402
eCl@ss 8.0	27440402

ETIM

ETIM 3.0	EC001121
ETIM 4.0	EC002637
ETIM 5.0	EC002637

UNSPSC

UNSPSC 6.01	30211810
UNSPSC 7.0901	39121409
UNSPSC 11	39121409
UNSPSC 12.01	39121409
UNSPSC 13.2	39121409

approvals

CSA / UL Recognized / VDE Gutachten mit Fertigungsüberwachung / cUL Recognized / GOST / IECEE CB Scheme / GOST / CCA / cULus Recognized /

Approval details

CSA

Usegroups	**B**	**D**
Nominal voltage UN	300 V	300 V
Nominal current IN	8 A	8 A
mm²/AWG/kcmil		

Base strip - MCD 1,5/ 6-G-3,81 - 1829992

approvals

UL Recognized

Usegroups	B	D
Nominal voltage UN	300 V	300 V
Nominal current IN	8 A	8 A
mm²/AWG/kcmil		

VDE Gutachten mit Fertigungsüberwachung

Nominal voltage UN	160 V
Nominal current IN	8 A
mm²/AWG/kcmil	

cUL Recognized

Usegroups	B	D
Nominal voltage UN	300 V	300 V
Nominal current IN	8 A	8 A
mm²/AWG/kcmil		

GOST

IECEE CB Scheme

Nominal voltage UN	160 V
Nominal current IN	8 A
mm²/AWG/kcmil	

CCA

Nominal voltage UN	160 V

Base strip - MCD 1,5/ 6-G-3,81 - 1829992

approvals

Nominal current IN	8 A
mm²/AWG/kcmil	

cULus Recognized

accessories

Coding element

CP-MSTB - 1734634



Labeled terminal marker

SK 3,81/2,8:FORTL.ZAHLEN - 0804109



Drawings

Base strip - MCD 1,5/ 6-G-3,81 - 1829992

Drilling diagram

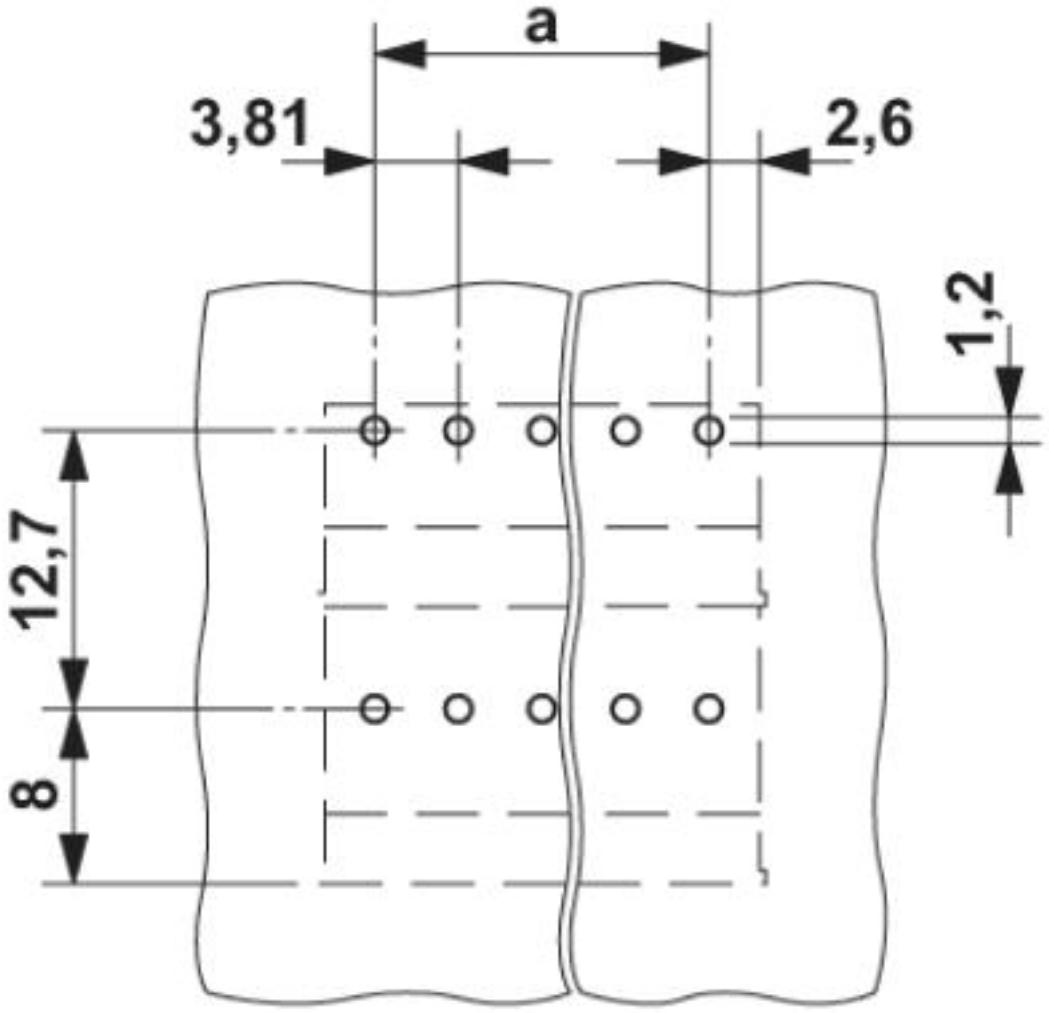

Base strip - MCD 1,5/ 6-G-3,81 - 1829992

Dimensioned drawing

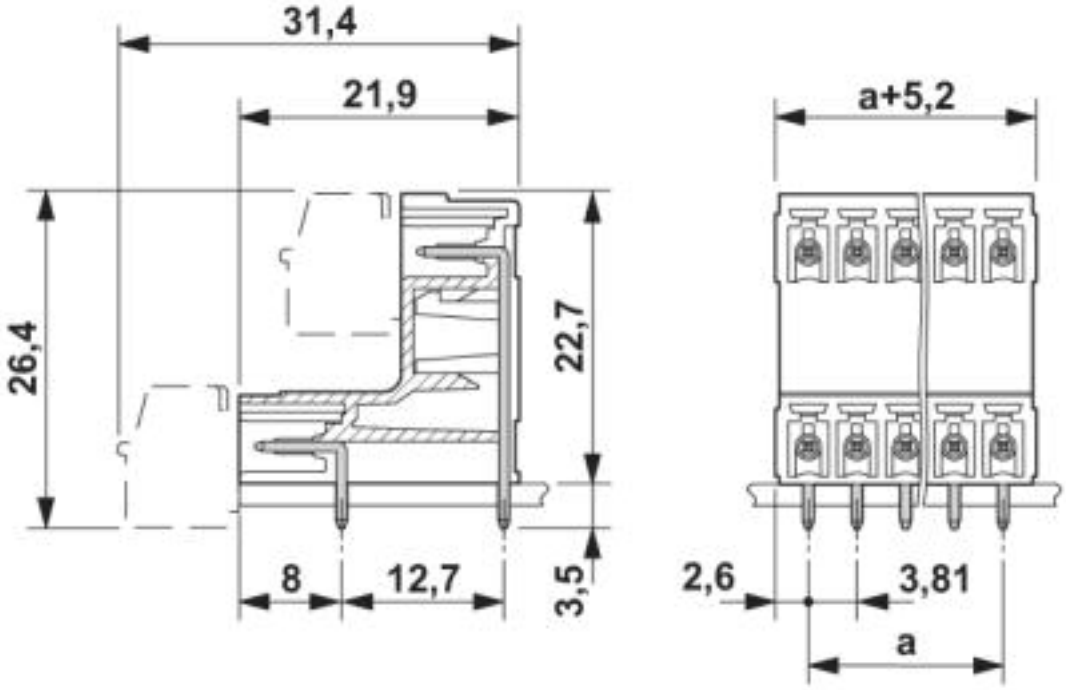

© Phoenix Contact 2013 - all rights reserved
http://www.phoenixcontact.com