PCB terminal block - SMKDS 2,5/ 2-5,08 - 1705469

Please be informed that the data shown in this PDF Document is generated from our Online Catalog. Please find the complete data in the user's documentation. Our General Terms of Use for Downloads are valid (http://download.phoenixcontact.com)



The illustration shows the 3-position version.

PCB terminal block, Nominal current: 20 A, Nom. voltage: 400 V, Pitch: 5.08 mm, Number of positions: 2, Connection method: Screw connection, Mounting: Soldering, Conductor/PCB connection direction: 40 °, Color: green, The article can be aligned to create different nos. of positions!

Product Features

- PCB terminal block with 40° angled connection direction
- 5.08 mm pitch
- Screwdriver axis vertical to the PCB

Key commercial data

package_quantity	50
GTIN	4017918144487

Technical data

Dimensions

Length	14.25 mm
Pitch	5.08 mm
Dimension a	5.08 mm
Pin dimensions	1 x 0,9 mm
Hole diameter	1.4 mm

General

Range of articles	SMKDS 2,5
Insulating material group	I
Rated surge voltage (III/3)	4 kV
Rated surge voltage (III/2)	4 kV
Rated surge voltage (II/2)	4 kV
Rated voltage (III/3)	250 V
Rated voltage (III/2)	400 V
Rated voltage (II/2)	630 V
Connection in acc. with standard	EN-VDE
Nominal current I_N	20 A
Nominal cross section	2.5 mm²
Maximum load current	20 A
Insulating material	PA

PCB terminal block - SMKDS 2,5/ 2-5,08 - 1705469

Technical data

General

Solder pin surface	Sn
Inflammability class according to UL 94	V0
Internal cylindrical gage	A3
Stripping length	11 mm
Number of positions	2
Screw thread	M3
Tightening torque, min	0.5 Nm
Tightening torque max	0.6 Nm

Connection data

Conductor cross section solid min.	0.14 mm²
Conductor cross section solid max.	2.5 mm²
Conductor cross section stranded min.	0.14 mm²
Conductor cross section stranded max.	2.5 mm²
Conductor cross section stranded, with ferrule without plastic sleeve min.	0.25 mm²
Conductor cross section stranded, with ferrule without plastic sleeve max.	2.5 mm²
Conductor cross section stranded, with ferrule with plastic sleeve min.	0.25 mm²
Conductor cross section stranded, with ferrule with plastic sleeve max.	2.5 mm²
Conductor cross section AWG/kcmil min.	26
Conductor cross section AWG/kcmil max	14
2 conductors with same cross section, solid min.	0.14 mm²
2 conductors with same cross section, solid max.	0.75 mm²
2 conductors with same cross section, stranded min.	0.14 mm²
2 conductors with same cross section, stranded max.	0.75 mm²
2 conductors with same cross section, stranded, ferrules without plastic sleeve, min.	0.25 mm²
2 conductors with same cross section, stranded, ferrules without plastic sleeve, max.	0.75 mm²
2 conductors with same cross section, stranded, TWIN ferrules with plastic sleeve, min.	0.5 mm²
2 conductors with same cross section, stranded, TWIN ferrules with plastic sleeve, max.	1.5 mm²
Minimum AWG according to UL/CUL	30
Maximum AWG according to UL/CUL	12

classifications

eCl@ss

eCl@ss 4.0	27141109
eCl@ss 4.1	27141109
eCl@ss 5.0	27141190

PCB terminal block - SMKDS 2,5/ 2-5,08 - 1705469

classifications

eCl@ss

eCl@ss 5.1	27141190
eCl@ss 6.0	27261101
eCl@ss 7.0	27440401
eCl@ss 8.0	27440401

ETIM

ETIM 3.0	EC001121
ETIM 4.0	EC002643
ETIM 5.0	EC002643

UNSPSC

UNSPSC 6.01	30211801
UNSPSC 7.0901	39121432
UNSPSC 11	39121432
UNSPSC 12.01	39121432
UNSPSC 13.2	39121432

approvals

CSA / UL Recognized / SEV / cUL Recognized / GOST / CCA / IECEE CB Scheme / GOST / cULus Recognized /

Approval details

CSA

Usegroups	**B**	**D**
Nominal voltage UN	300 V	300 V
Nominal current IN	10 A	10 A
mm²/AWG/kcmil	28-12	28-12

UL Recognized

Usegroups	**B**	**D**
Nominal voltage UN	250 V	300 V
Nominal current IN	10 A	10 A
mm²/AWG/kcmil	30-12	30-12

SEV

Nominal voltage UN	250 V

PCB terminal block - SMKDS 2,5/ 2-5,08 - 1705469

approvals

Nominal current IN	
mm²/AWG/kcmil	2.5

cUL Recognized

Usegroups	B	D
Nominal voltage UN	250 V	300 V
Nominal current IN	10 A	10 A
mm²/AWG/kcmil	30-12	30-12

GOST

CCA

IECEE CB Scheme

cULus Recognized

accessories

Labeled terminal marker

SK 5,08/3,8:FORTL.ZAHLEN - 0804293



Screwdriver tools

PCB terminal block - SMKDS 2,5/ 2-5,08 - 1705469

accessories

SZS 0,6X3,5 - 1205053



Terminal marking

SK 5,08/3,8:UNBEDRUCKT - 0805412



Marker pen

B-STIFT - 1051993



Bridge

EBP 2- 5 - 1733169



accessories

SK 5,08/3,8:SO - 0805085



PCB terminal block - SMKDS 2,5/ 2-5,08 - 1705469

accessories

Drawings

Drilling diagram

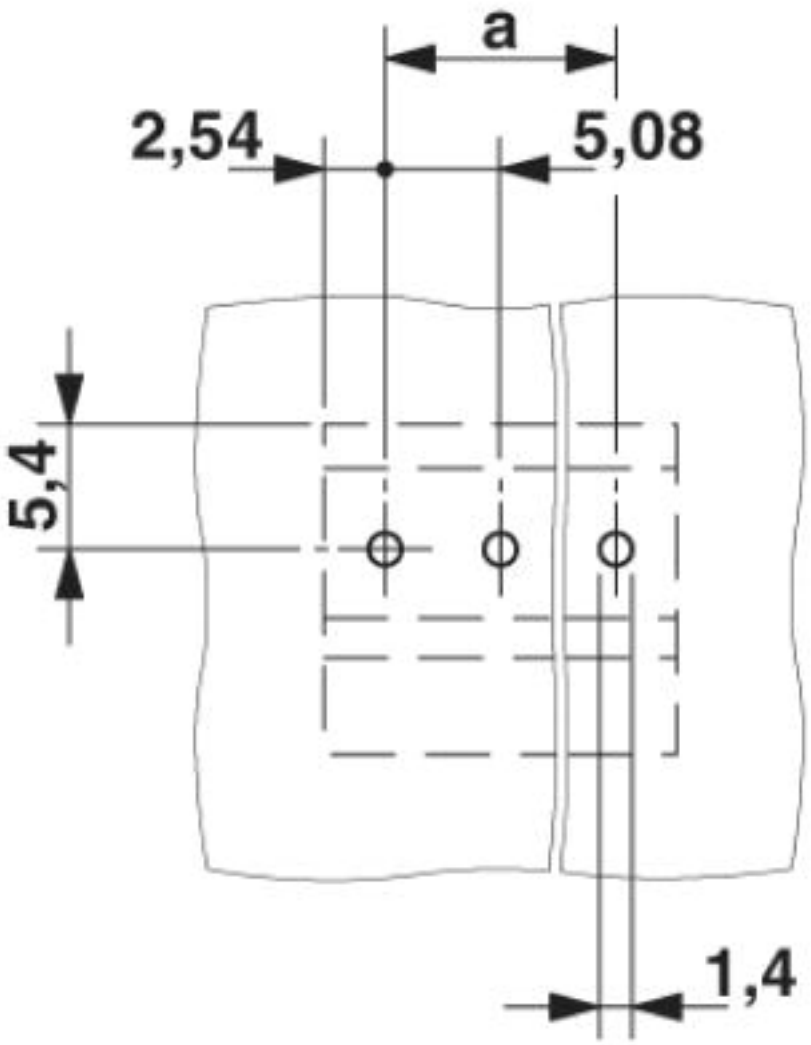

PCB terminal block - SMKDS 2,5/ 2-5,08 - 1705469

Dimensioned drawing

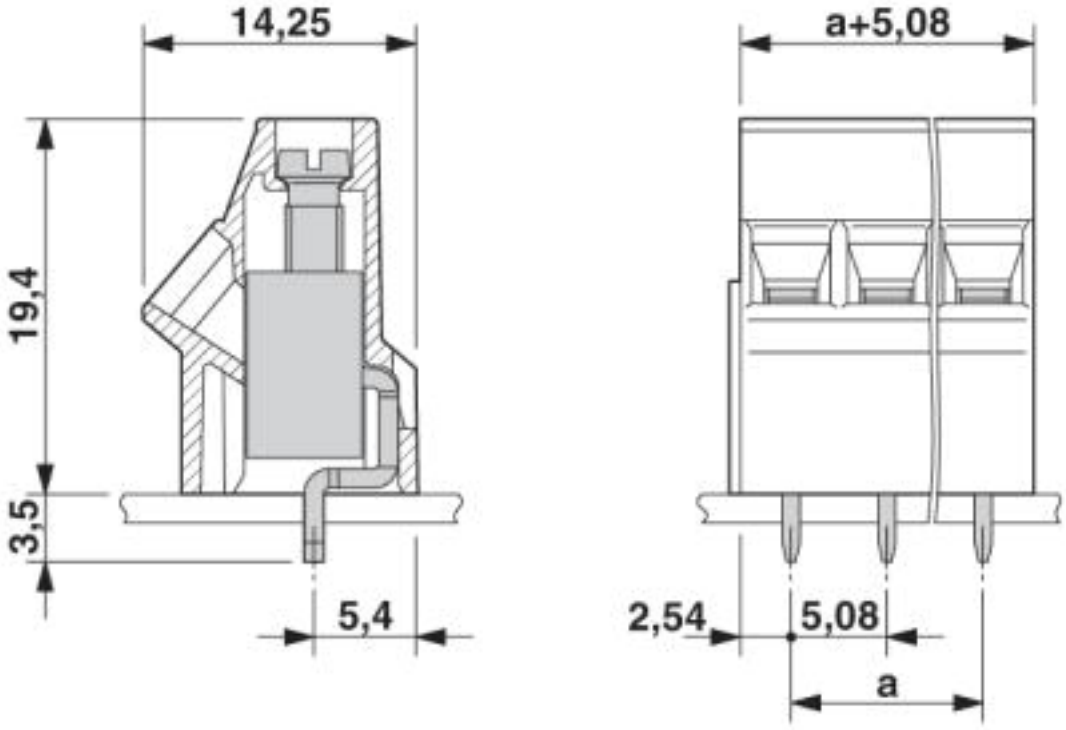

© Phoenix Contact 2013 - all rights reserved
http://www.phoenixcontact.com