PCB terminal block - MPT 0,5/ 6-2,54 - 1725698

Please be informed that the data shown in this PDF Document is generated from our Online Catalog. Please find the complete data in the user's documentation. Our General Terms of Use for Downloads are valid (http://download.phoenixcontact.com)



The figure shows a 10-position version of the product

PCB terminal block, Nominal current: 6 A, Nom. voltage: 160 V, Pitch: 2.54 mm, Number of positions: 6, Connection method: Screw connection, Mounting: Soldering, Conductor/PCB connection direction: 0 °, Color: green

Product Features

- Single-row type with horizontal connection direction
- Use in miniature modules with high contact density
- MICRO PCB terminal block with 2.54 mm IC pitch

Key commercial data

package_quantity	100
GTIN	4017918116293

Technical data

Dimensions

Length	6.2 mm
Pitch	2.54 mm
Dimension a	12.7 mm
Pin dimensions	0,5 x 0,9 mm
Hole diameter	1.1 mm

General

Range of articles	MPT 0,5
Insulating material group	I
Rated surge voltage (III/3)	1.5 kV
Rated surge voltage (III/2)	1.5 kV
Rated surge voltage (II/2)	2.5 kV
Rated voltage (III/3)	63 V
Rated voltage (III/2)	160 V
Rated voltage (II/2)	320 V
Connection in acc. with standard	EN-VDE
Nominal current I_N	6 A
Nominal cross section	0.5 mm²
Maximum load current	6 A
Insulating material	PA

PCB terminal block - MPT 0,5/ 6-2,54 - 1725698

Technical data

General

Solder pin surface	Sn
Inflammability class according to UL 94	V0
Stripping length	4.5 mm
Number of positions	6
Screw thread	M1,6
Tightening torque, min	0.12 Nm
Tightening torque max	0.15 Nm

Connection data

Conductor cross section solid min.	0.14 mm²
Conductor cross section solid max.	0.5 mm²
Conductor cross section stranded min.	0.14 mm²
Conductor cross section stranded max.	0.5 mm²
Conductor cross section stranded, with ferrule without plastic sleeve min.	0.25 mm²
Conductor cross section stranded, with ferrule without plastic sleeve max.	0.34 mm²
Conductor cross section stranded, with ferrule with plastic sleeve min.	0.25 mm²
Conductor cross section stranded, with ferrule with plastic sleeve max.	0.34 mm²
Conductor cross section AWG/kcmil min.	26
Conductor cross section AWG/kcmil max	20
2 conductors with same cross section, solid min.	0.14 mm²
2 conductors with same cross section, solid max.	0.34 mm²
2 conductors with same cross section, stranded min.	0.14 mm²
2 conductors with same cross section, stranded max.	0.34 mm²
Minimum AWG according to UL/CUL	30
Maximum AWG according to UL/CUL	20

classifications

eCl@ss

eCl@ss 4.0	27141109
eCl@ss 4.1	27141109
eCl@ss 5.0	27141190
eCl@ss 5.1	27141190
eCl@ss 6.0	27261101
eCl@ss 7.0	27440401
eCl@ss 8.0	27440401

ETIM

ETIM 3.0	EC001121
ETIM 4.0	EC002643

PCB terminal block - MPT 0,5/ 6-2,54 - 1725698

classifications

ETIM

ETIM 5.0	EC002643

UNSPSC

UNSPSC 6.01	30211801
UNSPSC 7.0901	39121432
UNSPSC 11	39121432
UNSPSC 12.01	39121432
UNSPSC 13.2	39121432

approvals

CSA / UL Recognized / cUL Recognized / GOST / GOST / cULus Recognized /

Approval details

CSA

Usegroups	**B**
Nominal voltage UN	125 V
Nominal current IN	6 A
mm²/AWG/kcmil	28-20

UL Recognized

Usegroups	**B**
Nominal voltage UN	125 V
Nominal current IN	6 A
mm²/AWG/kcmil	30-20

cUL Recognized

Usegroups	**B**
Nominal voltage UN	125 V
Nominal current IN	6 A
mm²/AWG/kcmil	30-20

GOST

PCB terminal block - MPT 0,5/ 6-2,54 - 1725698

approvals

cULus Recognized

accessories

Screwdriver tools

SZS 0,4X2,0 - 1205202



Labeled terminal marker

SK 2,54/2,8:FORTL.ZAHLEN - 0804853



Drawings

PCB terminal block - MPT 0,5/ 6-2,54 - 1725698

Drilling diagram

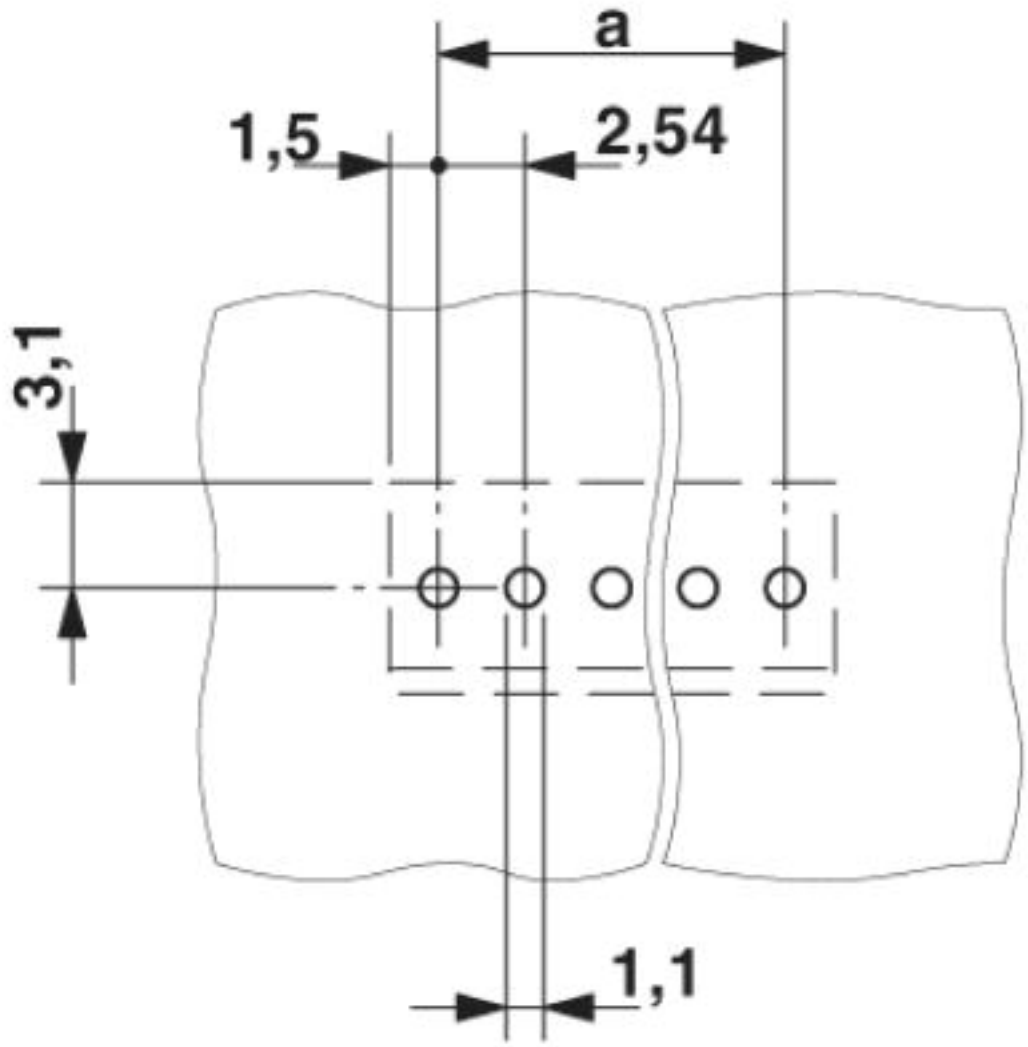

PCB terminal block - MPT 0,5/ 6-2,54 - 1725698

Dimensioned drawing

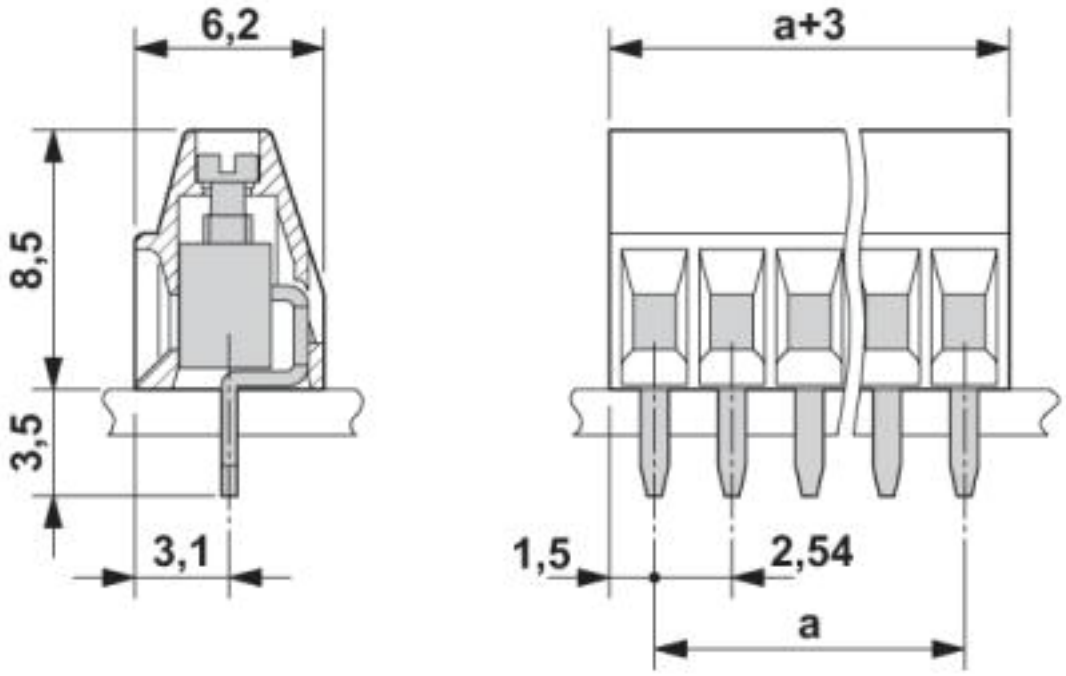

© Phoenix Contact 2013 - all rights reserved
http://www.phoenixcontact.com