PCB terminal block - FFKDS/H1-5,08 - 1790335

Please be informed that the data shown in this PDF Document is generated from our Online Catalog. Please find the complete data in the user's documentation. Our General Terms of Use for Downloads are valid (http://download.phoenixcontact.com)



PCB terminal block, Nominal current: 15 A, Nom. voltage: 320 V, Pitch: 5.08 mm, Number of positions: 1, Connection method: Spring-cage conn., Mounting: Soldering, Conductor/PCB connection direction: 0 °, Color: green, The article can be aligned to create different nos. of positions!

Product Features

- Two solder pins for a high level of stability on the PCB
- PCB terminal blocks with front spring-cage connection
- Opening lever for user-friendly actuation using a screwdriver
- Push-in direct plug-in technology for solid or stranded conductors with ferrules
- When connecting stranded conductors without ferrules, the terminal point is opened using an orange opening lever

Key commercial data

package_quantity	250
GTIN	4017918044244

Technical data

Dimensions

Length	13.6 mm
Pitch	5.08 mm
Pin dimensions	0,5 x 1 mm
Hole diameter	1.3 mm

General

Range of articles	FFKDS(A)/H1
Insulating material group	I
Rated surge voltage (III/3)	4 kV
Rated surge voltage (III/2)	4 kV
Rated surge voltage (II/2)	4 kV
Rated voltage (III/3)	250 V
Rated voltage (III/2)	320 V
Rated voltage (II/2)	630 V
Connection in acc. with standard	EN-VDE
Nominal current I_N	15 A
Nominal cross section	1.5 mm²
Maximum load current	15 A (with 1.5 mm² conductor cross section)
Insulating material	PA

PCB terminal block - FFKDS/H1-5,08 - 1790335

Technical data

General

Solder pin surface	Sn
Inflammability class according to UL 94	V0
Stripping length	10 mm
Number of positions	1

Connection data

Conductor cross section solid min.	0.2 mm²
Conductor cross section solid max.	1.5 mm²
Conductor cross section stranded min.	0.2 mm²
Conductor cross section stranded max.	1.5 mm²
Conductor cross section stranded, with ferrule without plastic sleeve min.	0.25 mm²
Conductor cross section stranded, with ferrule without plastic sleeve max.	0.75 mm²
Conductor cross section stranded, with ferrule with plastic sleeve min.	0.25 mm²
Conductor cross section stranded, with ferrule with plastic sleeve max.	0.75 mm²
Conductor cross section AWG/kcmil min.	24
Conductor cross section AWG/kcmil max	16
Minimum AWG according to UL/CUL	22
Maximum AWG according to UL/CUL	16

classifications

eCl@ss

eCl@ss 4.0	27141109
eCl@ss 4.1	27141109
eCl@ss 5.0	27141190
eCl@ss 5.1	27141190
eCl@ss 6.0	27261101
eCl@ss 7.0	27440401
eCl@ss 8.0	27440401

ETIM

ETIM 3.0	EC001121
ETIM 4.0	EC002643
ETIM 5.0	EC002643

UNSPSC

UNSPSC 6.01	30211801
UNSPSC 7.0901	39121432
UNSPSC 11	39121432
UNSPSC 12.01	39121432
UNSPSC 13.2	39121432

PCB terminal block - FFKDS/H1-5,08 - 1790335

approvals

CSA / UL Recognized / KEMA-KEUR / cUL Recognized / GOST / CCA / GOST / CCA / IECEE CB Scheme / cULus Recognized /

Approval details

CSA

Usegroups	B	D
Nominal voltage UN	300 V	300 V
Nominal current IN	10 A	10 A
mm²/AWG/kcmil	16	16

UL Recognized

Usegroups	B	D
Nominal voltage UN	300 V	300 V
Nominal current IN	10 A	10 A
mm²/AWG/kcmil	22-16	22-16

KEMA-KEUR

Nominal voltage UN	250 V
Nominal current IN	
mm²/AWG/kcmil	1.5

cUL Recognized

Usegroups	B	D
Nominal voltage UN	300 V	300 V
Nominal current IN	10 A	10 A
mm²/AWG/kcmil	22-16	22-16

GOST

CCA

PCB terminal block - FFKDS/H1-5,08 - 1790335

approvals

Nominal voltage UN	250 V
Nominal current IN	
mm²/AWG/kcmil	1.5

Nominal voltage UN	250 V
Nominal current IN	
mm²/AWG/kcmil	1.5

IECEE CB Scheme

Nominal voltage UN	250 V
Nominal current IN	
mm²/AWG/kcmil	1.5

cULus Recognized

accessories

Labeled terminal marker

SK 5,08/3,8:FORTL.ZAHLEN - 0804293



Drawings

PCB terminal block - FFKDS/H1-5,08 - 1790335

Drilling diagram

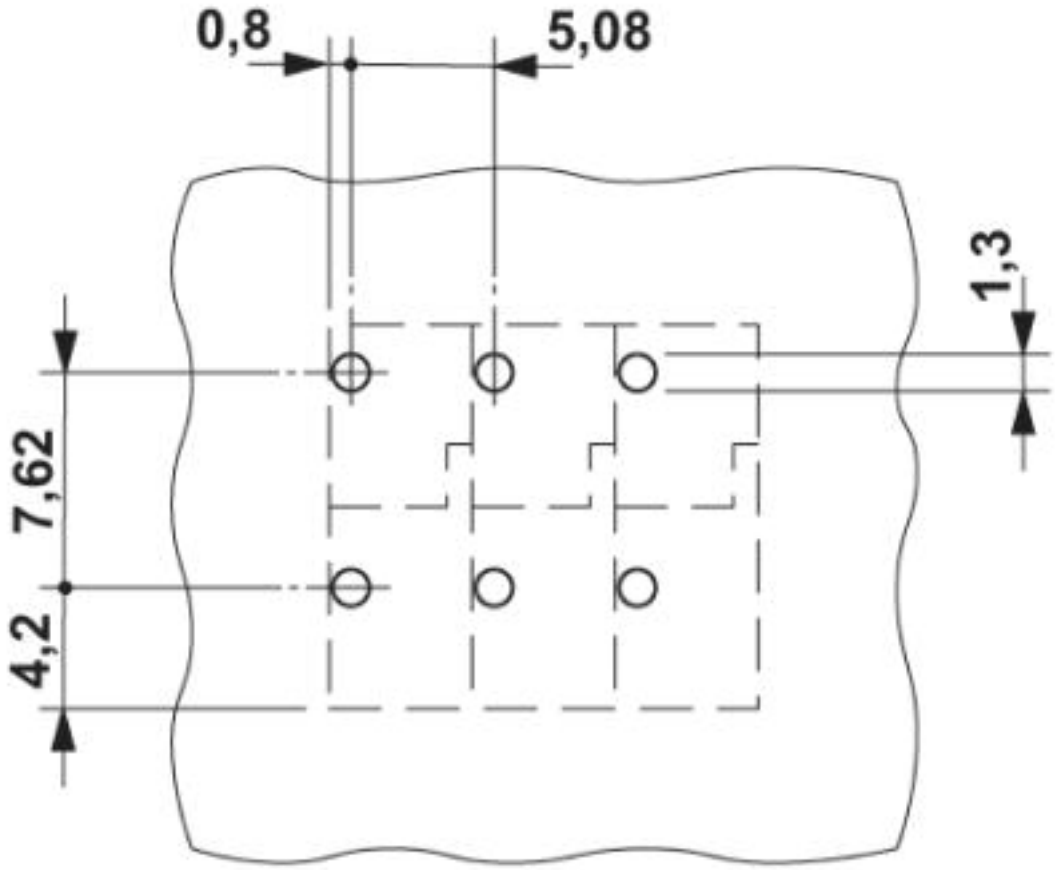

Dimensioned drawing

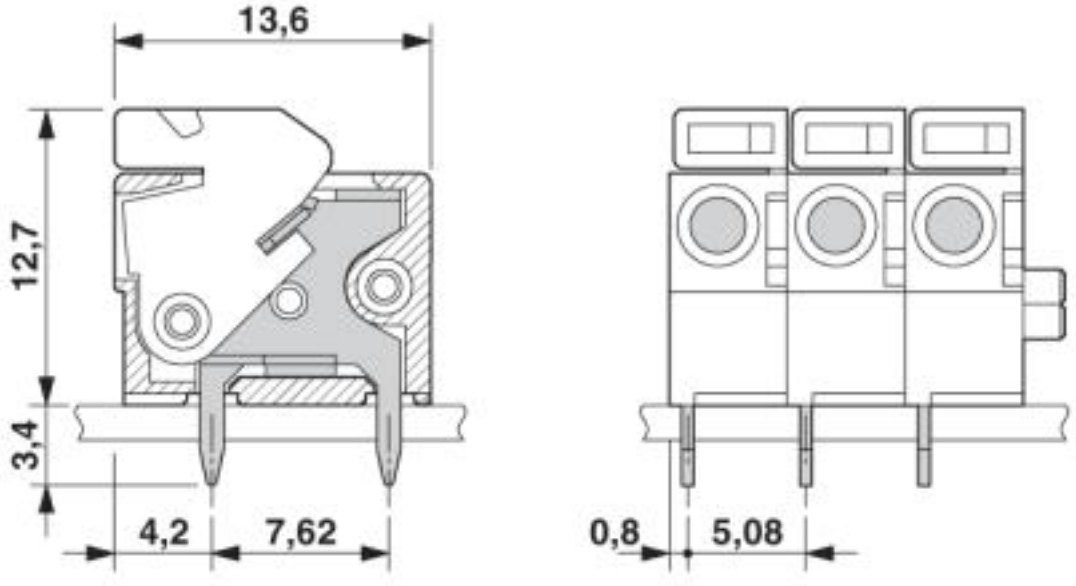

© Phoenix Contact 2013 - all rights reserved
http://www.phoenixcontact.com