Base strip - MCDN 1,5/18-G1-3,5 P26THR - 1953871

Please be informed that the data shown in this PDF Document is generated from our Online Catalog. Please find the complete data in the user's documentation. Our General Terms of Use for Downloads are valid (http://download.phoenixcontact.com)



The figure shows a 10-pos. version with 20 contacts

Header, Nominal current: 8 A, Rated voltage (III/2): 160 V, Number of positions: 18, Pitch: 3.5 mm, Color: Black, Contact surface: Tin, Assembly: SMD/THT/THR, The pin length is 26 mm. User information and design recommendations on Through Hole Reflow Technology can be found at: http://www.combicon.com

Key commercial data

package_quantity	50
GTIN	4017918919405

Technical data

Dimensions

Length	13.3 mm
Height	15.2 mm
Pitch	3.5 mm
Dimension a	59.5 mm
Pin dimensions	0,8 x 0,8 mm
Pin spacing	3.50 mm
Hole diameter	1.4 mm

General

Range of articles	MCDN 1,5/..-G1-THR
Insulating material group	IIIa
Rated surge voltage (III/3)	2.5 kV
Rated surge voltage (III/2)	2.5 kV
Rated surge voltage (II/2)	2.5 kV
Rated voltage (III/3)	160 V
Rated voltage (III/2)	160 V
Rated voltage (II/2)	250 V
Connection in acc. with standard	EN-VDE
Nominal current I_N	8 A
Maximum load current	8 A (per position)
Insulating material	LCP
Inflammability class according to UL 94	V0
Color	Black
Number of positions	18

Base strip - MCDN 1,5/18-G1-3,5 P26THR - 1953871

Technical data

classifications

eCl@ss

eCl@ss 4.0	272607xx
eCl@ss 4.1	27260701
eCl@ss 5.0	27260701
eCl@ss 5.1	27260701
eCl@ss 6.0	27260704
eCl@ss 7.0	27440402
eCl@ss 8.0	27440402

ETIM

ETIM 3.0	EC001121
ETIM 4.0	EC002637
ETIM 5.0	EC002637

UNSPSC

UNSPSC 6.01	30211810
UNSPSC 7.0901	39121409
UNSPSC 11	39121409
UNSPSC 12.01	39121409
UNSPSC 13.2	39121409

approvals

UL Recognized / cUL Recognized / cULus Recognized /

Approval details

UL Recognized

Usegroups	**B**	**D**
Nominal voltage UN	150 V	150 V
Nominal current IN	8 A	8 A
mm²/AWG/kcmil		

cUL Recognized

Usegroups	**B**	**D**
Nominal voltage UN	150 V	150 V
Nominal current IN	8 A	8 A

Base strip - MCDN 1,5/18-G1-3,5 P26THR - 1953871

approvals

Usegroups	B	D
mm²/AWG/kcmil		

cULus Recognized

accessories

Coding element

CP-MSTB - 1734634



Labeled terminal marker

SK 3,81/2,8:FORTL.ZAHLEN - 0804109



accessories

SK 3,5/2,8:SO - 0805030



Drawings

Base strip - MCDN 1,5/18-G1-3,5 P26THR - 1953871

Drilling diagram

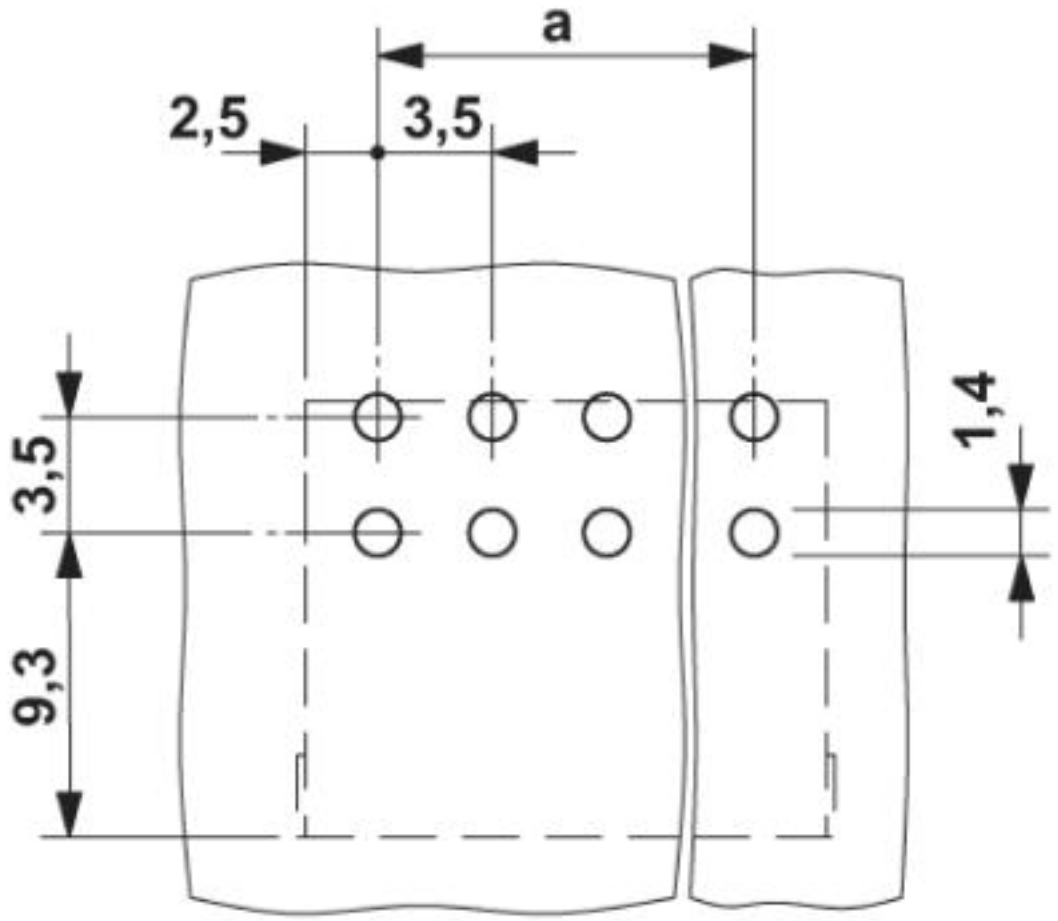

*) ≤ 8-pos. = 1.3 / > 8-pos. = 1.4

Base strip - MCDN 1,5/18-G1-3,5 P26THR - 1953871

Dimensioned drawing

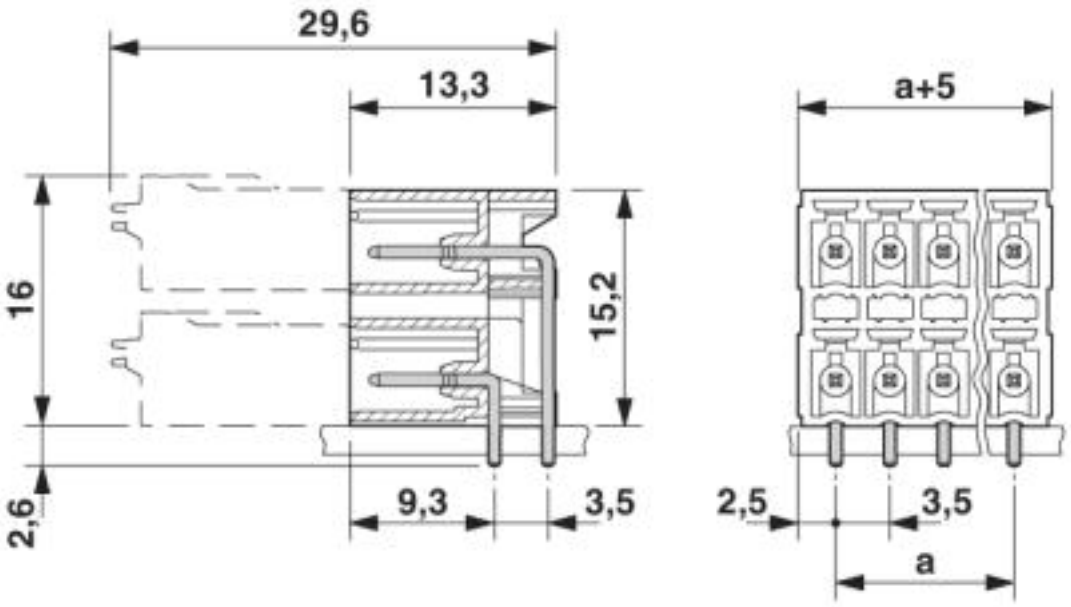

© Phoenix Contact 2013 - all rights reserved
http://www.phoenixcontact.com