Printed-circuit board connector - FMC 1,5/13-ST-3,5 - 1952377

Please be informed that the data shown in this PDF Document is generated from our Online Catalog. Please find the complete data in the user's documentation. Our General Terms of Use for Downloads are valid (http://download.phoenixcontact.com)

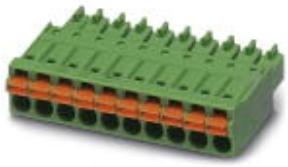

The figure shows a 10-position version of the product

Plug component, Nominal current: 8 A, Rated voltage (III/2): 160 V, Number of positions: 13, Pitch: 3.5 mm, Connection method: Spring-cage conn., Color: green, Contact surface: Tin

Product Features

- User-friendly actuation of the terminal point using a screwdriver
- Ultra-flat design height of just 7.8 mm
- Maximum contact and packing density in combination with double-level MCDN(V) 1,5 base strips
- Wide range of possible combinations with all MC 1,5 base strips with 3.5 or 3.81 mm pitch
- Fast conductor connection thanks to Push-in spring-cage connection
- Touch connection for voltage testing using a 1 mm Ø test pin

Key commercial data

package_quantity	50
GTIN	4017918942960

Technical data

Dimensions

Length	22.9 mm
Height	7.8 mm
Pitch	3.5 mm
Dimension a	42 mm

General

Range of articles	FMC 1,5/..-ST
Insulating material group	I
Rated surge voltage (III/3)	2.5 kV
Rated surge voltage (III/2)	2.5 kV
Rated surge voltage (II/2)	2.5 kV
Rated voltage (III/3)	160 V
Rated voltage (III/2)	160 V
Rated voltage (II/2)	320 V
Connection in acc. with standard	EN-VDE
Nominal current I_N	8 A
Nominal cross section	1.5 mm²

Printed-circuit board connector - FMC 1,5/13-ST-3,5 - 1952377

Technical data

General

Maximum load current	8 A
Insulating material	PA
Inflammability class according to UL 94	V0
Internal cylindrical gage	A1
Stripping length	10 mm
Number of positions	13

Connection data

Conductor cross section solid min.	0.2 mm²
Conductor cross section solid max.	1.5 mm²
Conductor cross section stranded min.	0.2 mm²
Conductor cross section stranded max.	1.5 mm²
Conductor cross section stranded, with ferrule without plastic sleeve min.	0.25 mm²
Conductor cross section stranded, with ferrule without plastic sleeve max.	1.5 mm²
Conductor cross section stranded, with ferrule with plastic sleeve min.	0.25 mm²
Conductor cross section stranded, with ferrule with plastic sleeve max.	0.75 mm²
Conductor cross section AWG/kcmil min.	24
Conductor cross section AWG/kcmil max	16
Minimum AWG according to UL/CUL	24
Maximum AWG according to UL/CUL	16

classifications

eCl@ss

eCl@ss 4.0	272607xx
eCl@ss 4.1	27260701
eCl@ss 5.0	27260701
eCl@ss 5.1	27260701
eCl@ss 6.0	27260704
eCl@ss 7.0	27440402
eCl@ss 8.0	27440402

ETIM

ETIM 3.0	EC001121
ETIM 4.0	EC002638
ETIM 5.0	EC002638

UNSPSC

UNSPSC 6.01	30211810
UNSPSC 7.0901	39121409
UNSPSC 11	39121409

Printed-circuit board connector - FMC 1,5/13-ST-3,5 - 1952377

classifications

UNSPSC

UNSPSC 12.01	39121409
UNSPSC 13.2	39121409

approvals

UL Recognized / cUL Recognized / GOST / GOST / cULus Recognized /

Approval details

UL Recognized

Usegroups	**B**	**D**
Nominal voltage UN	150 V	150 V
Nominal current IN	8 A	8 A
mm²/AWG/kcmil	24-16	24-16

cUL Recognized

Usegroups	**B**	**D**
Nominal voltage UN	150 V	150 V
Nominal current IN	8 A	8 A
mm²/AWG/kcmil	24-16	24-16

GOST

cULus Recognized

accessories

Labeled terminal marker

Printed-circuit board connector - FMC 1,5/13-ST-3,5 - 1952377

accessories

SK 3,5/2,8:FORTL.ZAHLEN - 0804073



Terminal marking

SK U/2,8 WH:UNBEDRUCKT - 0803883



Marker pen

B-STIFT - 1051993



accessories

SK 3,5/2,8:SO - 0805030



Drawings

Printed-circuit board connector - FMC 1,5/13-ST-3,5 - 1952377

Diagram

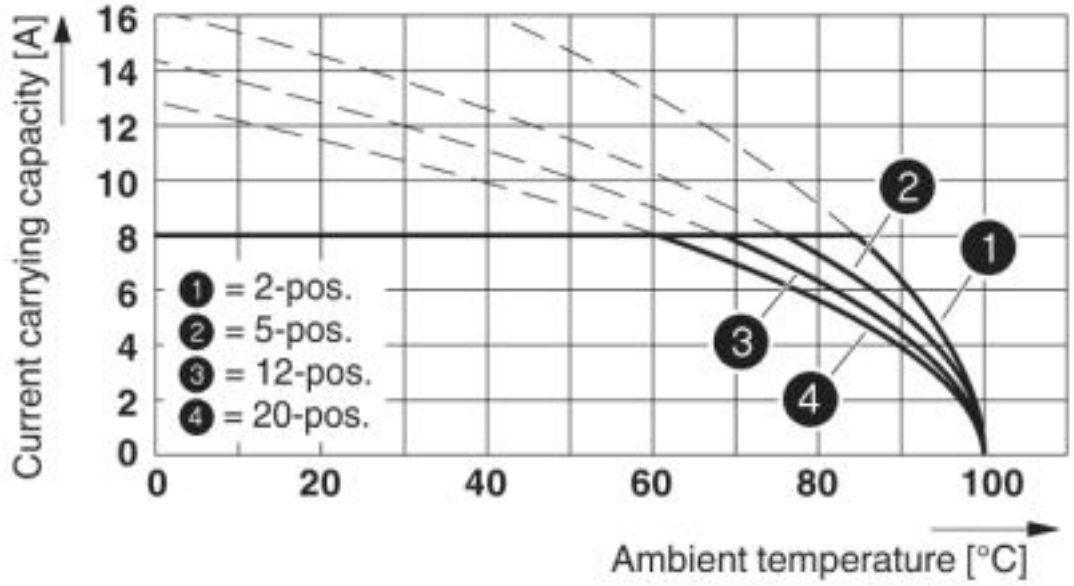

Dimensioned drawing

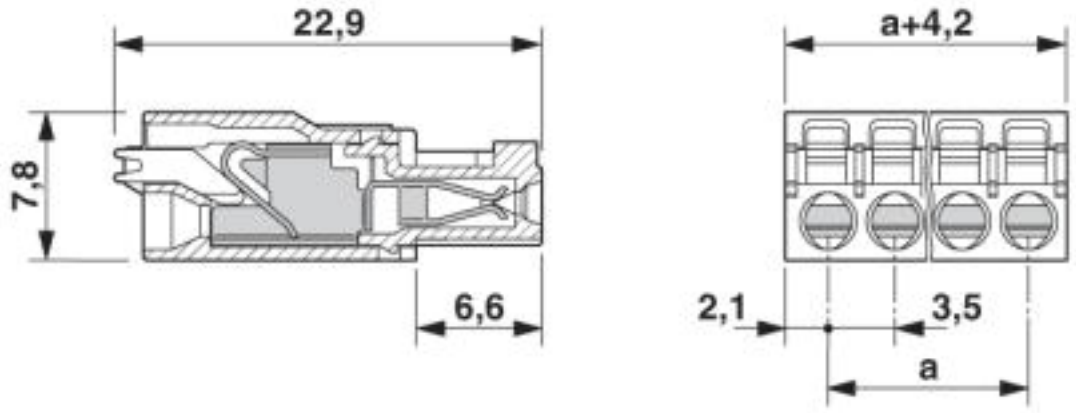

© Phoenix Contact 2013 - all rights reserved
http://www.phoenixcontact.com