Printed-circuit board connector - MC 1,5/ 3-STF-5,08 - 1847369

Please be informed that the data shown in this PDF Document is generated from our Online Catalog. Please find the complete data in the user's documentation. Our General Terms of Use for Downloads are valid (http://download.phoenixcontact.com)



The figure shows a 10-position version of the product

Plug component, Nominal current: 8 A, Rated voltage (III/2): 320 V, Number of positions: 3, Pitch: 5.08 mm, Connection method: Screw connection, Color: green, Contact surface: Tin

Product Features

- Plug-in direction parallel to the conductor axis
- Low design height of the MC 1,5 plug range
- High dielectric strength of up to 320 V according to III/2
- ST1 version with plug-in area moved to the bottom, lies flush with the bottom edge of the housing
- Individual position coding by removing the coding tab and connecting the coding profile to the header

Key commercial data

package_quantity	50
GTIN	4017918102623

Technical data

Dimensions

Height	11.1 mm
Pitch	5.08 mm
Dimension a	10.16 mm

General

Range of articles	MC 1,5/..-STF
Insulating material group	I
Rated surge voltage (III/3)	4 kV
Rated surge voltage (III/2)	4 kV
Rated surge voltage (II/2)	4 kV
Rated voltage (III/3)	250 V
Rated voltage (III/2)	320 V
Rated voltage (II/2)	400 V
Connection in acc. with standard	EN-VDE
Nominal current I_N	8 A
Nominal cross section	1.5 mm²
Maximum load current	8 A (with 1.5 mm² conductor cross section)
Insulating material	PA

Printed-circuit board connector - MC 1,5/ 3-STF-5,08 - 1847369

Technical data

General

Inflammability class according to UL 94	V0
Internal cylindrical gage	A1
Stripping length	7 mm
Number of positions	3
Screw thread	M2
Tightening torque, min	0.22 Nm
Tightening torque max	0.25 Nm

Connection data

Conductor cross section solid min.	0.14 mm²
Conductor cross section solid max.	1.5 mm²
Conductor cross section stranded min.	0.14 mm²
Conductor cross section stranded max.	1.5 mm²
Conductor cross section stranded, with ferrule without plastic sleeve min.	0.25 mm²
Conductor cross section stranded, with ferrule without plastic sleeve max.	1.5 mm²
Conductor cross section stranded, with ferrule with plastic sleeve min.	0.25 mm²
Conductor cross section stranded, with ferrule with plastic sleeve max.	0.5 mm²
Conductor cross section AWG/kcmil min.	28
Conductor cross section AWG/kcmil max	16
2 conductors with same cross section, solid min.	0.08 mm²
2 conductors with same cross section, solid max.	0.5 mm²
2 conductors with same cross section, stranded min.	0.08 mm²
2 conductors with same cross section, stranded max.	0.75 mm²
2 conductors with same cross section, stranded, ferrules without plastic sleeve, min.	0.25 mm²
2 conductors with same cross section, stranded, ferrules without plastic sleeve, max.	0.34 mm²
2 conductors with same cross section, stranded, TWIN ferrules with plastic sleeve, min.	0.5 mm²
2 conductors with same cross section, stranded, TWIN ferrules with plastic sleeve, max.	0.5 mm²
Minimum AWG according to UL/CUL	30
Maximum AWG according to UL/CUL	14

classifications

eCl@ss

eCl@ss 4.0	272607xx
eCl@ss 4.1	27260701
eCl@ss 5.0	27260701
eCl@ss 5.1	27260701

Printed-circuit board connector - MC 1,5/ 3-STF-5,08 - 1847369

classifications

eCl@ss

eCl@ss 6.0	27260704
eCl@ss 7.0	27440402
eCl@ss 8.0	27440402

ETIM

ETIM 3.0	EC001121
ETIM 4.0	EC002638
ETIM 5.0	EC002638

UNSPSC

UNSPSC 6.01	30211810
UNSPSC 7.0901	39121409
UNSPSC 11	39121409
UNSPSC 12.01	39121409
UNSPSC 13.2	39121409

approvals

CSA / UL Recognized / VDE Gutachten mit Fertigungsüberwachung / cUL Recognized / GOST / IECEE CB Scheme / GOST / CCA / cULus Recognized /

Approval details

CSA

Usegroups	**B**	**D**
Nominal voltage UN	300 V	300 V
Nominal current IN	8 A	8 A
mm²/AWG/kcmil	28-16	28-16

UL Recognized

Usegroups	**B**	**D**
Nominal voltage UN	300 V	300 V
Nominal current IN	8 A	8 A
mm²/AWG/kcmil	30-14	30-14

VDE Gutachten mit Fertigungsüberwachung

Printed-circuit board connector - MC 1,5/ 3-STF-5,08 - 1847369

approvals

Nominal voltage UN	250 V
Nominal current IN	8 A
mm²/AWG/kcmil	0.2-1.5

cUL Recognized

Usegroups	B	D
Nominal voltage UN	300 V	300 V
Nominal current IN	8 A	8 A
mm²/AWG/kcmil	30-14	30-14

GOST

IECEE CB Scheme

Nominal voltage UN	250 V
Nominal current IN	8 A
mm²/AWG/kcmil	0.2-1.5

CCA

Nominal voltage UN	250 V
Nominal current IN	8 A
mm²/AWG/kcmil	0.2-1.5

cULus Recognized

accessories

Screwdriver tools

Printed-circuit board connector - MC 1,5/ 3-STF-5,08 - 1847369

accessories

SZS 0,4X2,5 VDE - 1205037



Labeled terminal marker

SK 5,08/2,8:FORTL.ZAHLEN - 0804280



Cable housing

KGG-MC 1,5/ 3 - 1834356



Marker pen

B-STIFT - 1051993



accessories

-

Printed-circuit board connector - MC 1,5/ 3-STF-5,08 - 1847369

accessories

-

Drawings

Diagram

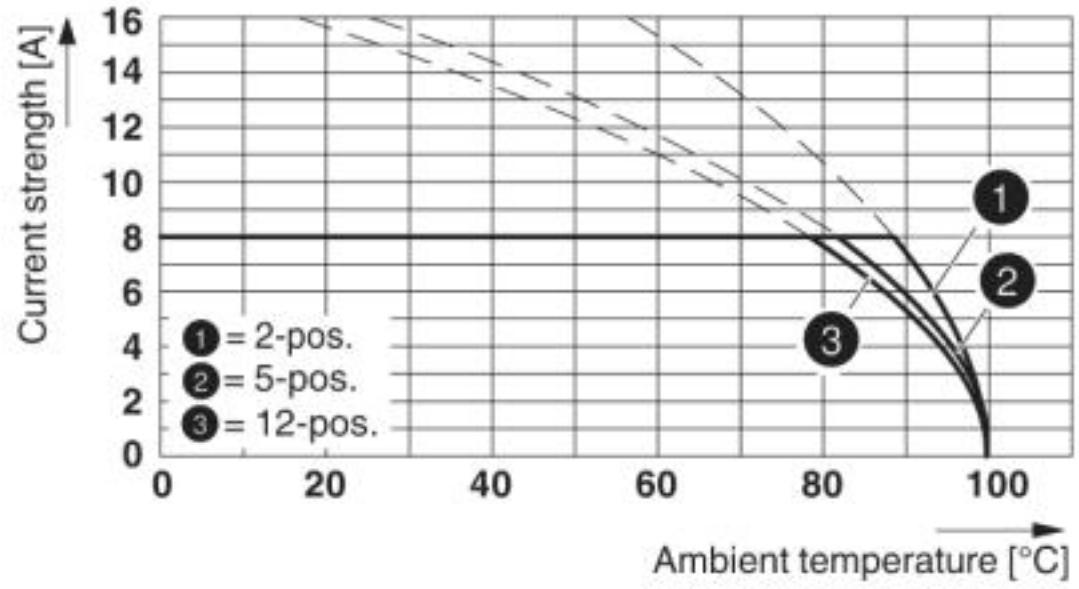

Type: MC 1,5/...-STF-5,08 with MC 1,5/...-GF-5,08

Printed-circuit board connector - MC 1,5/ 3-STF-5,08 - 1847369

Dimensioned drawing

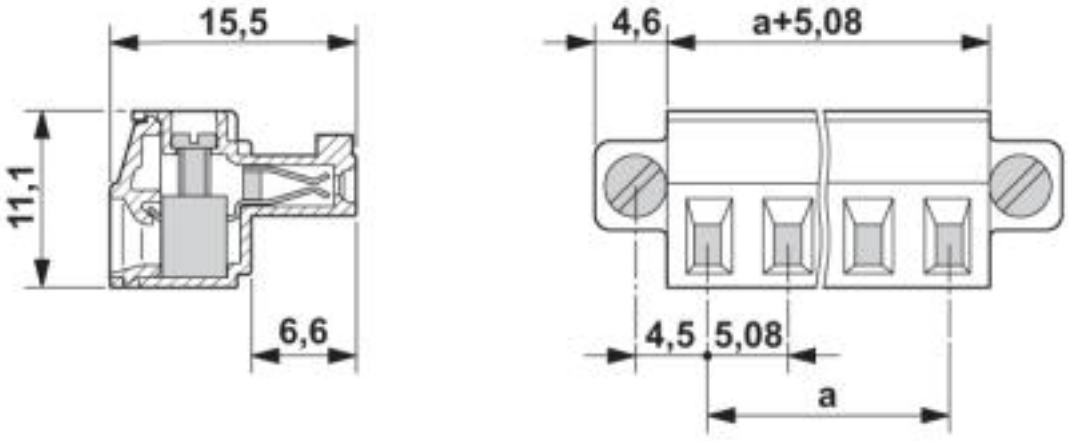

© Phoenix Contact 2013 - all rights reserved
http://www.phoenixcontact.com