PCB terminal block - MK3DS 1/ 5-3,81 - 1727764

Please be informed that the data shown in this PDF Document is generated from our Online Catalog. Please find the complete data in the user's documentation. Our General Terms of Use for Downloads are valid (http://download.phoenixcontact.com)



The figure shows a 10-pos. version with 30 contacts

PCB terminal block, Nominal current: 8 A, Nom. voltage: 160 V, Pitch: 3.81 mm, Number of positions: 5, Connection method: Screw connection, Mounting: Soldering, Conductor/PCB connection direction: 0 °, Color: green

Product Features

- Three-level type with high packing and connection density
- Offset levels for optimum access to the terminal points

Key commercial data

package_quantity	50
GTIN	4017918116392

Technical data

Dimensions

Length	25 mm
Pitch	3.81 mm
Dimension a	15.24 mm
Pin dimensions	0,5 x 0,9 mm
Hole diameter	1.1 mm

General

Range of articles	MK3DS 1
Insulating material group	I
Rated surge voltage (III/3)	2.5 kV
Rated surge voltage (III/2)	2.5 kV
Rated surge voltage (II/2)	2.5 kV
Rated voltage (III/3)	160 V
Rated voltage (III/2)	160 V
Rated voltage (II/2)	320 V
Connection in acc. with standard	EN-VDE
Nominal current I_N	8 A
Nominal cross section	1 mm²
Maximum load current	10 A
Insulating material	PA
Solder pin surface	Sn

PCB terminal block - MK3DS 1/ 5-3,81 - 1727764

Technical data

General

Inflammability class according to UL 94	V0
Stripping length	5 mm
Number of positions	5
Screw thread	M2
Tightening torque, min	0.22 Nm
Tightening torque max	0.25 Nm

Connection data

Conductor cross section solid min.	0.14 mm²
Conductor cross section solid max.	1.5 mm²
Conductor cross section stranded min.	0.14 mm²
Conductor cross section stranded max.	1 mm²
Conductor cross section stranded, with ferrule without plastic sleeve min.	0.25 mm²
Conductor cross section stranded, with ferrule without plastic sleeve max.	0.5 mm²
Conductor cross section stranded, with ferrule with plastic sleeve min.	0.25 mm²
Conductor cross section stranded, with ferrule with plastic sleeve max.	0.5 mm²
Conductor cross section AWG/kcmil min.	26
Conductor cross section AWG/kcmil max	16
2 conductors with same cross section, solid min.	0.14 mm²
2 conductors with same cross section, solid max.	0.5 mm²
2 conductors with same cross section, stranded min.	0.14 mm²
2 conductors with same cross section, stranded max.	0.2 mm²
Minimum AWG according to UL/CUL	30
Maximum AWG according to UL/CUL	16

classifications

eCl@ss

eCl@ss 4.0	27141109
eCl@ss 4.1	27141109
eCl@ss 5.0	27141190
eCl@ss 5.1	27141190
eCl@ss 6.0	27261101
eCl@ss 7.0	27440401
eCl@ss 8.0	27440401

ETIM

ETIM 3.0	EC001121
ETIM 4.0	EC002643
ETIM 5.0	EC002643

PCB terminal block - MK3DS 1/ 5-3,81 - 1727764

classifications

UNSPSC

UNSPSC 6.01	30211801
UNSPSC 7.0901	39121432
UNSPSC 11	39121432
UNSPSC 12.01	39121432
UNSPSC 13.2	39121432

approvals

CSA / UL Recognized / SEV / cUL Recognized / GOST / CCA / IECEE CB Scheme / GOST / cULus Recognized /

Approval details

CSA

Usegroups	**B**	**D**
Nominal voltage UN	150 V	300 V
Nominal current IN	10 A	10 A
mm²/AWG/kcmil	28-16	28-16

UL Recognized

Usegroups	**B**	**D**
Nominal voltage UN	300 V	300 V
Nominal current IN	10 A	10 A
mm²/AWG/kcmil	30-16	30-16

SEV

Nominal voltage UN	125 V
Nominal current IN	
mm²/AWG/kcmil	1.5

cUL Recognized

Usegroups	**B**	**D**
Nominal voltage UN	300 V	300 V
Nominal current IN	10 A	10 A
mm²/AWG/kcmil	30-16	30-16

PCB terminal block - MK3DS 1/ 5-3,81 - 1727764

approvals

GOST

CCA

IECEE CB Scheme

cULus Recognized

accessories

Labeled terminal marker

SK 3,81/2,8:FORTL.ZAHLEN - 0804109



Screwdriver tools

SZS 0,4X2,5 VDE - 1205037



Drawings

PCB terminal block - MK3DS 1/ 5-3,81 - 1727764

Drilling diagram

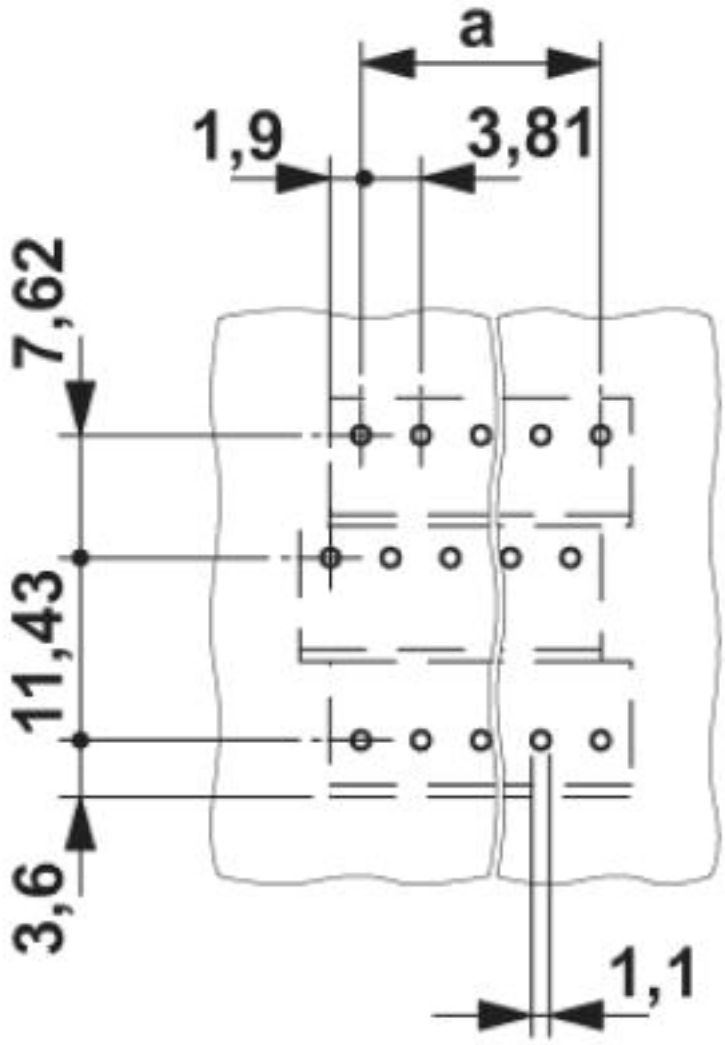

PCB terminal block - MK3DS 1/ 5-3,81 - 1727764

Dimensioned drawing

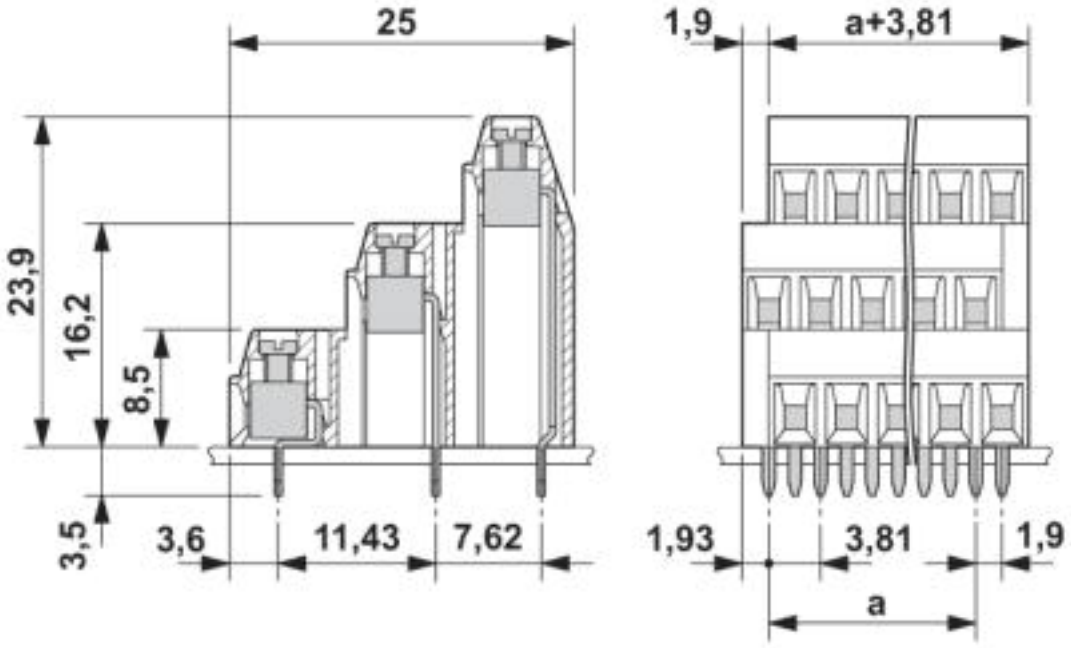

© Phoenix Contact 2013 - all rights reserved
http://www.phoenixcontact.com