Six-conductor plug with straight cover

●Material・Finish

Part name	Material	Finish
Plug case	Polycarbonate	Clear
Terminal	Phosphor Bronze	Gold plated
Cover	Polycarbonate	Beige

Applicable Cable	
Conductor diameter	Copper foil or AWG#26
Insulator diameter	φ0.9～φ1.0

●Electrical Performance

Item	Condition	Specification
Current rating	Per pin	0.5A
Voltage rating	Per pin	125V AC
Insulation Resistance	100V DC	100 MΩ Min.
Withstanding Voltage	1 minute	500V r.m.s AC

●TM11P-66P(＊＊)

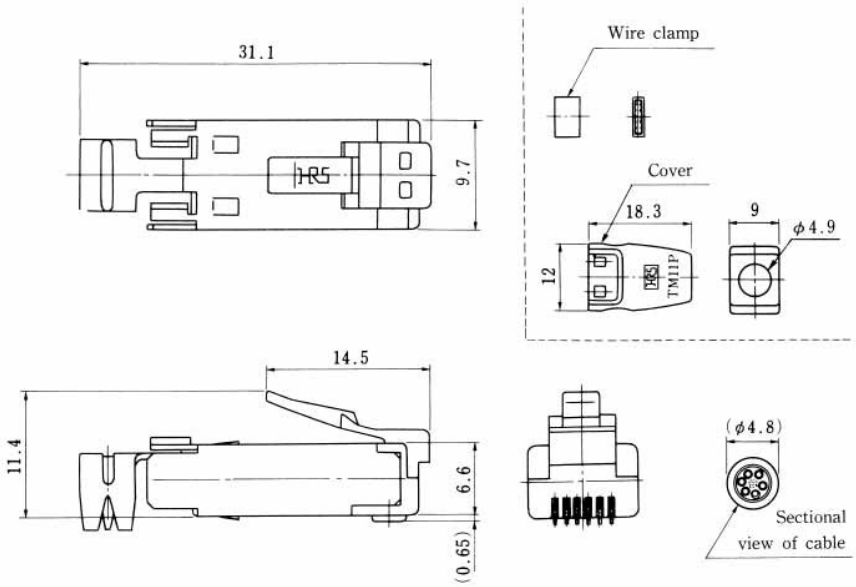

CL No.	Part No.	Cover Color	RoHS
222-2149-9-50	TM11P-66P(50)	Beige	YES
222-2149-9-53	TM11P-66P(53)	Black	

(Number of plugs in package : 100)

Eight-conductor plug with straight cover

●TM11AP-88P(**)

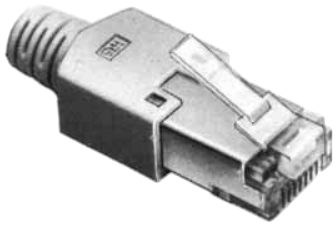

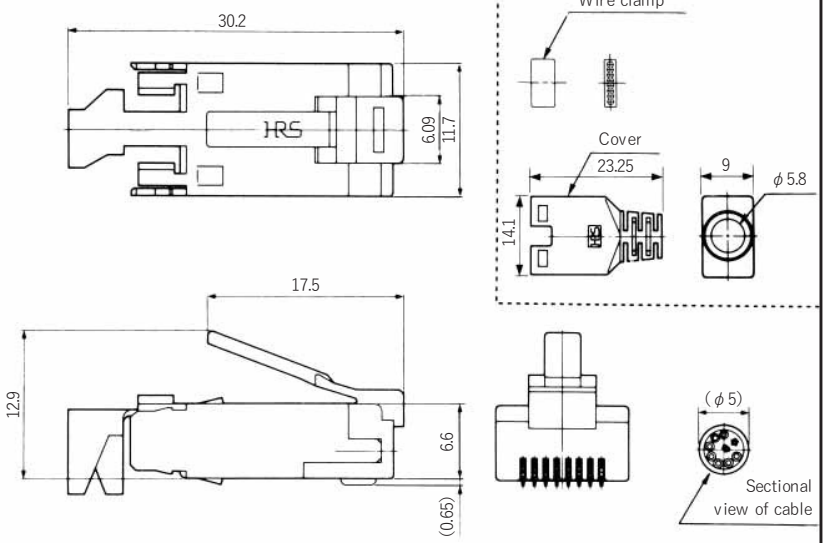

CL No.	Part No.	Cover color	RoHS
222-2780-6	TM11AP-88	Beige	YES
222-2780-6-02	TM11AP-88P(02)	Medium gray	
222-2780-6-03	TM11AP-88P(03)	Black	
222-2780-6-04	TM11AP-88P(04)	Natural light gray	

Note:This plug is NOT intended to be used for gang-jack.

(Number of plugs in package:100)

Eight-conductor thin straight plug with cover (For gang-jack)

●TM11AP1-88P(＊＊)

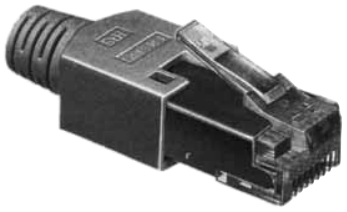

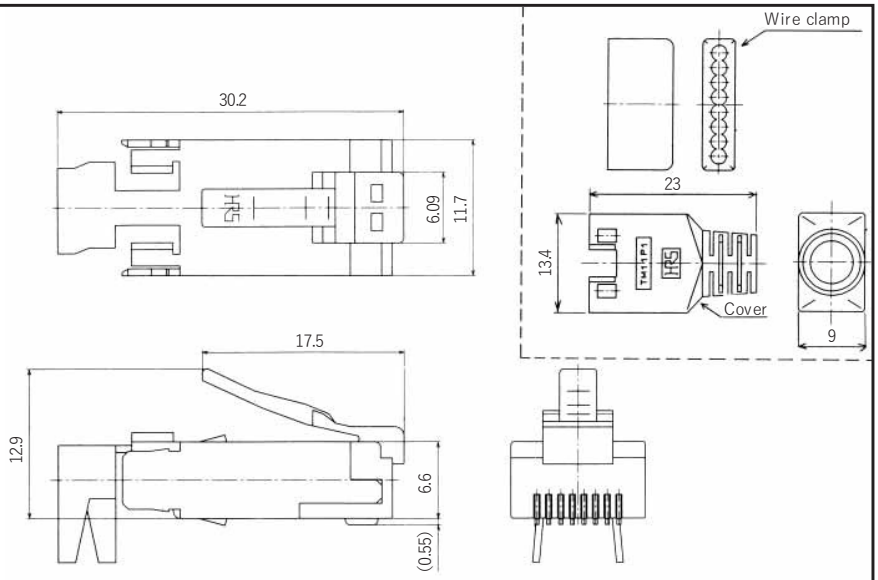

CL No.	Part No.	Cover color	RoHS
222-2782-1	TM11AP1-88P	Light beige	YES
222-2782-1-02	TM11AP1-88P(02)	Medium gray	
222-2782-1-03	TM11AP1-88P(03)	Black	
222-2782-1-04	TM11AP1-88P(04)	Natural light gray	
222-2782-1-05	TM11AP1-88P(05)	Red	
222-2782-1-06	TM11AP1-88P(06)	Green	
222-2782-1-07	TM11AP1-88P(07)	Blue	
222-2782-1-08	TM11AP1-88P(08)	Yellow	
222-2782-1-09	TM11AP1-88P(09)	Orange	

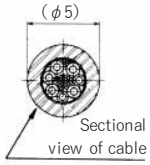

(Number of plugs in package:100)

L-shaped 8-conductor plug with cover

●TM11APA-88P(＊＊)

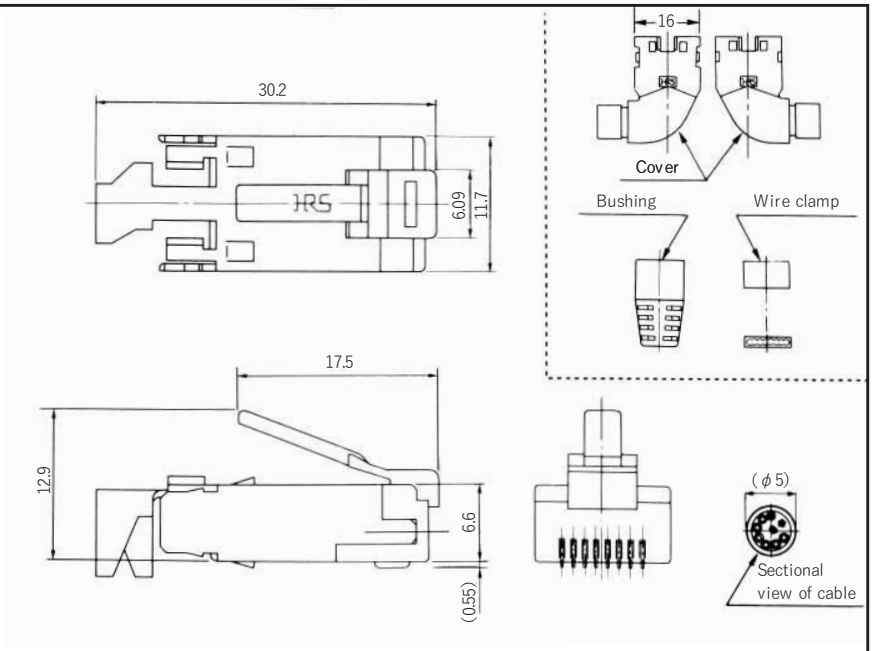

CL No.	Part No.	Cover Color	RoHS
222-2781-9	TM11APA-88P	Light beige	YES
222-2781-9-03	TM11APA-88P(03)	Black	

(Number of plugs in package:100)

T-shaped 8-conductor plug with cover

●TM11APA1-88P(＊＊)

CL No.	Part No.	RoHS
222-2783-4	TM11APA1-88P	YES

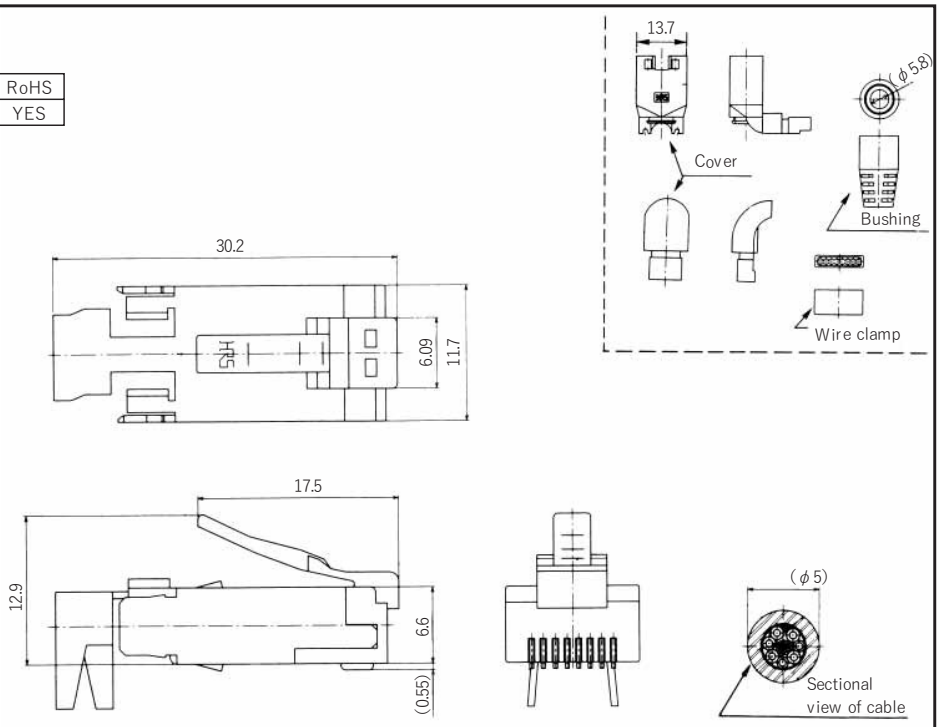

Note:Cover standard color is light beige

(Number of plugs in package:100)

●PLUG WIRING TOOL

Jig / Plug	Cable Cramp Jig		Terminal Crimping Jig	
	CL No.	Product No.	CL No.	Product No.
TM11P「 」-66P		TM11P66P cable crimping	901-0938-4	Applicator 105TM11P-66P
	902-0132-8	Hand press HOS-7	901-0005-4	Model 105 crimping tool
TM11P「 」-88P	902-0077-1	TM11P88P cable crimping jig	901-0221-0	Applicator 105TM11P-88P
	902-0132-8	Hand press HOS-7	901-0005-4	Model 105 crimping tool

●PLUG ASSEMBLY DRAWING

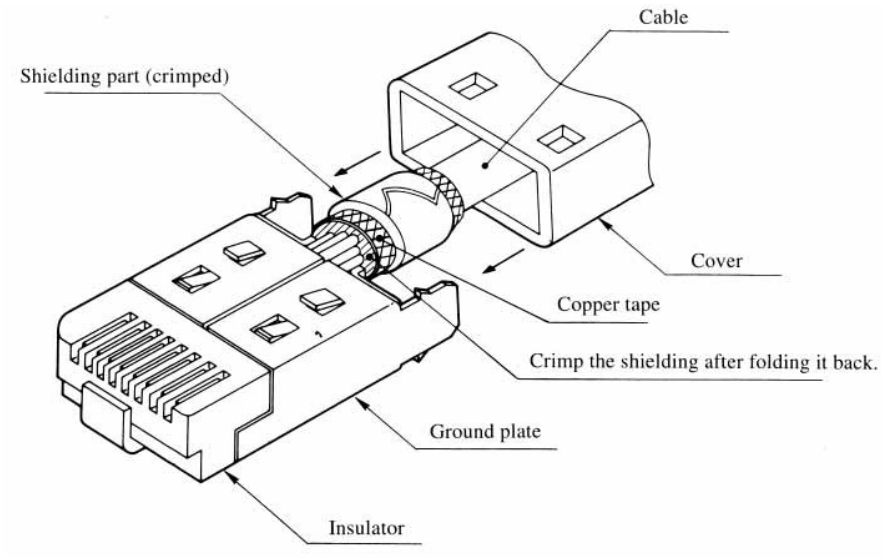

APPLICABLE STANDARD				
RATING	OPERATING TEMPERATURE RANGE	-25 °C TO 60 °C	STORAGE TEMPERATURE RANGE	°C TO °C
	VOLTAGE	125 V AC	CURRENT	500 mA

SPECIFICATIONS

ITEM	TEST METHOD	REQUIREMENTS	QT	AT
CONSTRUCTION				
GENERAL EXAMINATION	VISUALLY AND BY MEASURING INSTRUMENT.	ACCORDING TO DRAWING.	×	×
MARKING	CONFIRMED VISUALLY.		×	×
ELECTRIC CHARACTERISTICS				
CONTACT RESISTANCE	100 mA (DC OR 1000 Hz AC). MEASUREMENT POINTS SHALL BE AS FOLLOWS. 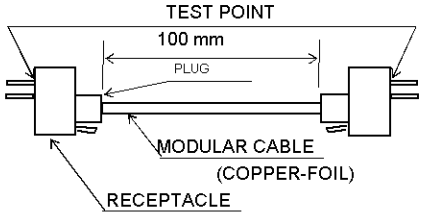 (ONE EXAMPLE CONNECTOR CONFIGURTION IS SHOWN.)	230 mΩ MAX.	×	×
INSULATION RESISTANCE	100 V DC.	100 MΩ MIN.	×	×
VOLTAGE PROOF	500 V AC FOR 1 min.	NO FLASHOVER OR BREAKDOWN.	×	×
MECHANICAL CHARACTERISTICS				
MECHANICAL OPERATION	750 TIMES INSERTIONS AND EXTRACTIONS.	1) CONTACT RESISTANCE: 250 mΩ MAX. 2) NO DAMAGE, CRACK AND LOOSENESS OF PARTS.	×	–
VIBRATION	FREQUENCY 10 TO 55 Hz SINGLE AMPLITUDE 0.75 mm, - m/s² AT 2 h, FOR 3 DIRECTION.	1) NO ELECTRICAL DISCONTINUITY OF 5μs. 2) CONTACT RESISTANCE: 250 mΩ MAX. 3) NO DAMAGE, CRACK AND LOOSENESS OF PARTS.	×	–
SHOCK	490 m/s² DIRECTIONS OF PULSE 11 ms AT 3 TIMES FOR 3 DIRECTIONS.		×	–
ENVIRONMENTAL CHARACTERISTICS				
DAMP HEAT,CYCLIC	EXPOSED AT 40 °C, 90 TO 95 %, 500 h.	1) CONTACT RESISTANCE: 250 mΩ MAX. 2) INSULATION RESISTANCE: 1 MΩ MIN. (AT HIGH HUMIDITY) 10 MΩ MIN. (AT DRY) 3) NO DAMAGE, CRACK AND LOOSENESS OF PARTS.	×	–
RAPID CHANGE OF TEMPERATURE	TEMPERATURE –55 → 5 TO 35 → 85 → 5 TO35 ℃ TIME 30 → 10 TO 15→ 30 → 10 TO 15 min UNDER 5 CYCLES.	1) CONTACT RESISTANCE: 250 mΩ MAX. 2) INSULATION RESISTANCE: 100 MΩ MIN. 3) NO DAMAGE, CRACK AND LOOSENESS OF PARTS.	×	–
CORROSION SALT MIST	EXPOSED IN 5 % SALT WATER SPRAY FOR 48 h.	1) CONTACT RESISTANCE: 250 mΩ MAX. 2) NO HEAVY CORROSION.	×	–

	COUNT	DESCRIPTION OF REVISIONS	DESIGNED	CHECKED	DATE
0					

REMARK

Unless otherwise specified, refer to JIS C 5402.

APPROVED	HO.MIWA	06.06.29
CHECKED	YH.ENAMI	06.06.29
DESIGNED	TU.TANIGUCHI	06.06.28
DRAWN	YK.SATO	06.06.27

Note QT:Qualification Test AT:Assurance Test X:Applicable Test

DRAWING NO. ELC4-120679-03

HRS	SPECIFICATION SHEET	PART NO.	TM11AP-88P(61)	
	HIROSE ELECTRIC CO., LTD.	CODE NO.	CL222-2780-6-61	0 1/1

FORM HD0011-2-1