背面

4 Route Cables
(理線)

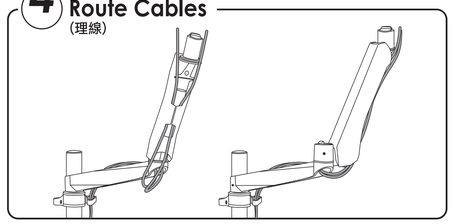

Supplied Parts and Hardwares
(包裝內部品及五金件)

Parts \ Motel 型號	EM31111	EM31116	EM31136	EM31114	EM32111	EM32116	EM32136	EM32114	EM33111	EM33116	EM33136	EM33114	EM34111	EM34116	EM34136	EM34114	EM34121	EM34126	EM34036	EM35111	EM35116	EM35136	EM35114	EM35121	EM35126	EM35036	EM43111	EM43116	EM43136	EM43114	EM45111	EM45116	EM45136	EM45114	EM45121	EM45126	EM45036	EM52111	EM55111	EM55116	EM55136	EM53211	EM53216	EM53236
C-Clamp (C型夾座)		●				●				●				●				●			●				●			●				●				●				●			●		
Grommet (穿桌夾座)	●				●				●				●				●			●			●			●			●					●			●	●			●		
2 in 1 (2合1)			●				●				●				●				●			●				●			●			●				●				●			●
Wall Mount (鐘座)				●				●				●				●							●							●													
M6 Wrench (M6六角板手) M6													●	●	●	●	●	●	●	●	●	●	●	●	●						● x2	● x2	● x2	● x2	● x2	● x2		● x3	● x3	● x3			
M3 Wrench (M3六角板手) M3	●	●	●	●	●	●	●	●	●	●	●	●	●	●	●	●	●	●	●	●	●	●	●	●	●	● x2	● x2	● x2	● x2	● x2	● x2	● x2	● x2	● x2	● x2	● x2	● x3	● x3	● x3	● x3	● x3	● x3	● x3
EVA Cushion (軟墊)	●	●	●		●	●	●		●	●	●		●	●	●		●	●	●	●	●	●		●	●	●	●	●	●		●	●	●		●	●	●	●	●	●	●	●	●
Ancore x 2 Screw x 2 (壁虎 x 2 螺釘 x 2)				●				●				●				●							●							●				●									
Spring Arm(懸臂)													●	●	●	●	●	●	●	●	●	●	●	●	●						● x2	● x2	● x2	● x2	● x2	● x2	● x2		● x3	● x3	● x3			
Swivel Arm (延伸臂)					●	●	●	●	● x2	● x2	● x2	● x2								●	●	●	●	●	●	●	● x4	● x4	● x4	● x4	● x2	● x2	● x2	● x2	● x2	● x2	● x2	● x3	● x2	● x2	● x2	● x4	● x4	● x4
Monitor Mount (螢幕固定座)	●	●	●	●	●	●	●	●	●	●	●	●	●	●	●	●	●	●	●	●	●	●	●	●	●	●	● x2	● x2	● x2	● x2	● x2	● x2	● x2	● x2	● x2	● x2	● x3	● x3	● x3	● x3	● x3	● x3	● x3
Hand Screw x 4 (手旋螺絲 x 4)	●	●	●	●	●	●	●	●	●	●	●	●	●	●	●	●	●	●	●	●	●	●	●	●	●	●	● x2	● x2	● x2	● x2	● x2	● x2	● x2	● x2	● x2	● x2	● x3	● x3	● x3	● x3	● x3	● x3	● x3
Cable Clip (理線夾)	●	●	●		●	●	●		●	●	●		●	●	●						●	●	●					●	●	●	●	●	●					● x2	● x2	● x2	● x2	● x2	● x2
Dual Stand (分支座)																												●	●	●	●	●	●	●	●	●	●	●	●	●	●	●	●	●

Features and Specification
(功能特性)

	VESA	LIFT	ANGLE	PIVOT	SWIVEL	PAN	TILT	EXTENSION	VERTICAL	Wt.Load
EM31111	MIS-D (75x75/100x100)	200mm	0	360°	0	360°	105°	0	0	≦14kg
EM31116	MIS-D (75x75/100x100)	200mm	0	360°	0	360°	105°	0	0	≦14kg
EM31136	MIS-D (75x75/100x100)	200mm	0	360°	0	360°	105°	0	0	≦14kg
EM31114	MIS-D (75x75/100x100)	0	0	360°	0	180°	105°	0	0	≦14kg
EM32111	MIS-D (75x75/100x100)	200mm	0	360°	360°	360°	105°	210mm	0	≦14kg
EM32116	MIS-D (75x75/100x100)	200mm	0	360°	360°	360°	105°	210mm	0	≦14kg
EM32136	MIS-D (75x75/100x100)	200mm	0	360°	360°	360°	105°	210mm	0	≦14kg
EM32114	MIS-D (75x75/100x100)	0	0	360°	180°	360°	105°	210mm	0	≦14kg
EM33111	MIS-D (75x75/100x100)	200mm	0	360°	360°	360°	105°	420mm	0	≦14kg
EM33116	MIS-D (75x75/100x100)	200mm	0	360°	360°	360°	105°	420mm	0	≦14kg
EM33136	MIS-D (75x75/100x100)	200mm	0	360°	360°	360°	105°	420mm	0	≦14kg
EM33114	MIS-D (75x75/100x100)	0	0	360°	360 °	360°	105°	420mm	0	≦14kg
EM34111	MIS-D (75x75/100x100)	200mm	100°	360°	360°	240°	105°	330mm	270mm	2~9kg
EM34116	MIS-D (75x75/100x100)	200mm	100°	360°	360°	240°	105°	330mm	270mm	2~9kg
EM34136	MIS-D (75x75/100x100)	200mm	100°	360°	360°	240°	105°	330mm	270mm	2~9kg
EM34114	MIS-D (75x75/100x100)	0	100°	360°	180°	240°	105°	330mm	270mm	2~9kg
EM34121	MIS-D (75x75/100x100)	0	100°	360°	360°	240°	105°	330mm	270mm	2~9kg
EM34126	MIS-D (75x75/100x100)	0	100°	360°	360°	240°	105°	330mm	270mm	2~9kg
EM34036	MIS-D (75x75/100x100)	0	100°	360°	360°	240°	105°	330mm	270mm	2~9kg
EM35111	MIS-D (75x75/100x100)	200mm	100°	360°	360°	240°	105°	540mm	270mm	2~9kg
EM35116	MIS-D (75x75/100x100)	200mm	100°	360°	360°	240°	105°	540mm	270mm	2~9kg
EM35136	MIS-D (75x75/100x100)	200mm	100°	360°	360°	240°	105°	540mm	270mm	2~9kg

	VESA	LIFT	ANGLE	PIVOT	SWIVEL	PAN	TILT	EXTENSION	VERTICAL	Wt.Load
EM35114	MIS-D (75x75/100x100)	0	100°	360°	360°	240°	105°	540mm	270mm	2~9kg
EM35121	MIS-D (75x75/100x100)	0	100°	360°	360°	240°	105°	540mm	270mm	2~9kg
EM35126	MIS-D (75x75/100x100)	0	100°	360°	360°	240°	105°	540mm	270mm	2~9kg
EM35036	MIS-D (75x75/100x100)	0	100°	360°	360°	240°	105°	540mm	270mm	2~9kg
EM43111	MIS-D (75x75/100x100)	160mm	0	360°	360°	360°	105°	420mm	0	Pole Max Loading ≦20kg
EM43116	MIS-D (75x75/100x100)	160mm	0	360°	360°	360°	105°	420mm	0	Pole Max Loading ≦20kg
EM43136	MIS-D (75x75/100x100)	160mm	0	360°	360°	360°	105°	420mm	0	Pole Max Loading ≦20kg
EM43114	MIS-D (75x75/100x100)	0	0	360°	360°	360°	105°	420mm	0	≦30kg
EM45111	MIS-D (75x75/100x100)	160mm	100°	360°	360°	240°	105°	540mm	270mm	Pole Max Loading ≦20kg
EM45116	MIS-D (75x75/100x100)	160mm	100°	360°	360°	240°	105°	540mm	270mm	Pole Max Loading ≦20kg
EM45136	MIS-D (75x75/100x100)	160mm	100°	360°	360 °	240°	105°	540mm	270mm	Pole Max Loading ≦20kg
EM45114	MIS-D (75x75/100x100)	0	100°	360°	360°	240°	105°	540mm	270mm	Each Arm ≦9kg
EM45121	MIS-D (75x75/100x100)	0	100°	360°	360°	240°	105°	540mm	270mm	Each Arm ≦9kg
EM45126	MIS-D (75x75/100x100)	0	100°	360°	360°	240°	105°	540mm	270mm	Each Arm ≦9kg
EM45036	MIS-D (75x75/100x100)	0	100°	360°	360°	240°	105°	540mm	270mm	Each Arm ≦9kg
EM52111	MIS-D (75x75/100x100)	350mm	0	360°	360°	360°	105°	210mm	0	Pole Max Loading ≦20kg
EM55111	MIS-D (75x75/100x100)	330mm	100°	360°	360°	240°	105°	540mm	270mm	Pole Max Loading ≦20kg
EM55116	MIS-D (75x75/100x100)	330mm	100°	360°	360°	240°	105°	540mm	270mm	Pole Max Loading ≦20kg
EM55136	MIS-D (75x75/100x100)	330mm	100°	360°	360°	240°	105°	540mm	270mm	Pole Max Loading ≦20kg
EM53211	MIS-D (75x75/100x100)	330mm	0	360°	360°	360°	105°	420mm	0	Pole Max Loading ≦20kg
EM53216	MIS-D (75x75/100x100)	330mm	0	360°	360°	360°	105°	420mm	0	Pole Max Loading ≦20kg
EM53236	MIS-D (75x75/100x100)	330mm	0	360°	360°	360°	105°	420mm	0	Pole Max Loading ≦20kg

保固條款 (Scope of Guarantee)

1. 客戶滿意是我們努力追求的目標，為維持提供客戶最完善的售後服務及關於消費者的權利，請仔細閱讀說明書內的資訊。
2. 為提高服務效率，請在維修保固及換貨時提供購買發票或本保證書。
3. 在購買商品時，請務必填寫購買日並加蓋店章，如有記載遺漏，會造成在保證期限內無法免費維修。
4. 如超過保固期，消費者必須負擔零件及維修服務費。
5. 請按說明書內之規格限制，正常使用本產品，如使用者使用超過產品規格之承受重量，造成產品受損故障，雖在保固期內，將不負責維修或消費者必須負擔零件及維修服務費。

1. Consumer's satisfaction with our products is the goal that we have been heading for. To assure the best after-sale service to consumers and ensure consumer's rights, please read carefully the information stated in the instruction manual.
2. To enhance our service efficiency, please provide purchase invoice or warranty card if request for product maintenance or merchandise exchange.
3. The actual date of purchase and affixed seal by distributor on warranty card is required. Free after-sale service will not be guaranteed even under warranty period should any incomplete purchase information.
4. The costs of components and maintenance will be at consumer's expense should the product is invalid for warranty period.
5. Please refer to specification limitation specified in the instruction manual for correct usage. Even under the warranty period, this warranty does not cover the problems or damage resulting from the loading weight that excesses the specification specified in the instruction manual; and the costs of components and maintenance will be at consumer's expense.

Warning:
Please lift arm up to highest position while removing the monitor. The monitor arm could bounce upward to cause personal injury when the weight of monitor is removed.
卸下螢幕時，請將支架移到最上端，因為維持平衡的螢幕重量被移開時，支架會反彈，可能會造成傷害。

正面

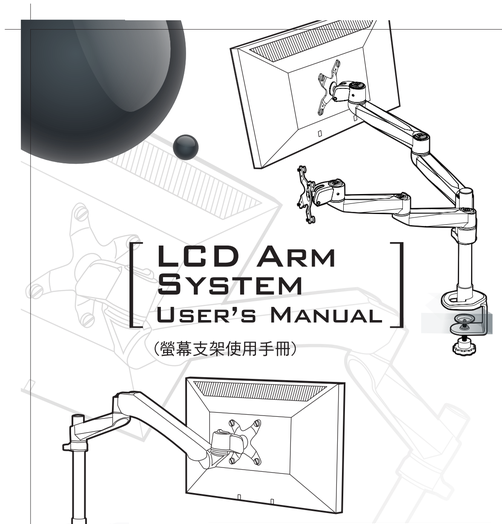

LCD ARM SYSTEM USER'S MANUAL
(螢幕支架使用手冊)

Warranty effective since 保證期開購買日	Year 年	Month 月	Day 日起
Seal by Distributor 販售店章			

Please read carefully warranty details stated in the instruction manual.
請詳閱說明書內保固條款說明

71H016135-015

1 Installation Method of Mount Type
(夾座安裝方法)

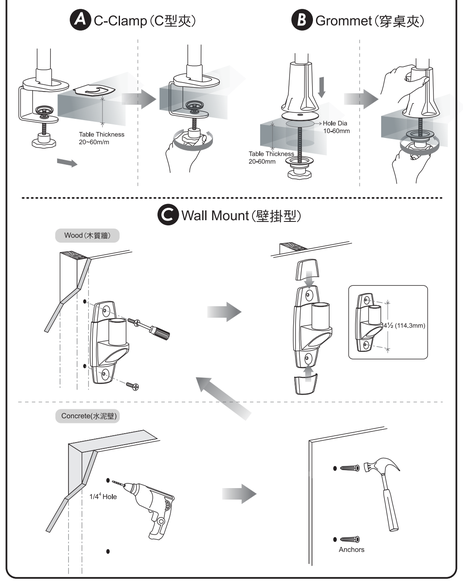

2 Install Arms
(安裝支架)

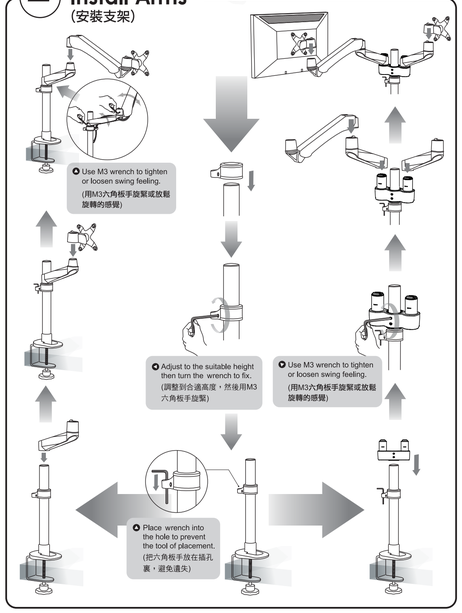
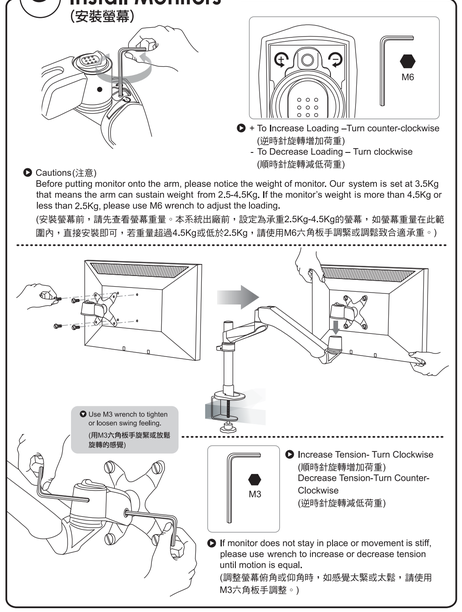
3 Install Monitors
(安裝螢幕)