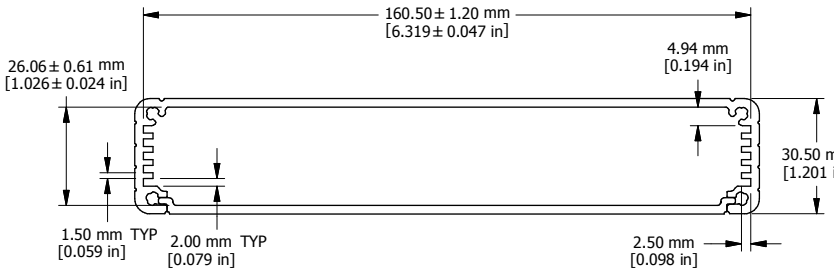

EXTRUSION

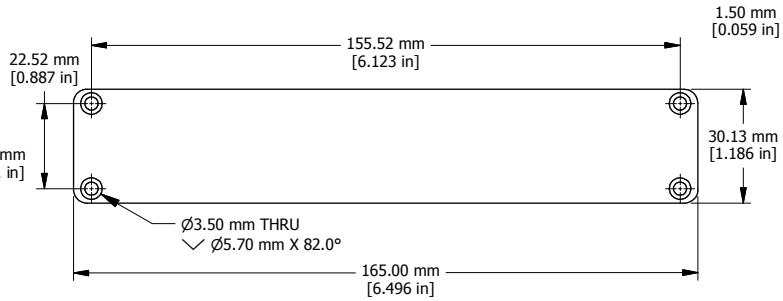

END PLATE

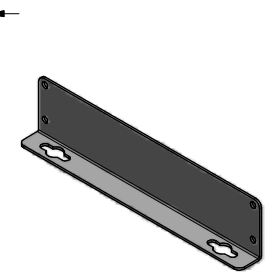

OPTIONAL FLANGE END PANELS 1455RF

EXTRUSION DESIGNED FOR 160MM WIDE PC BOARD

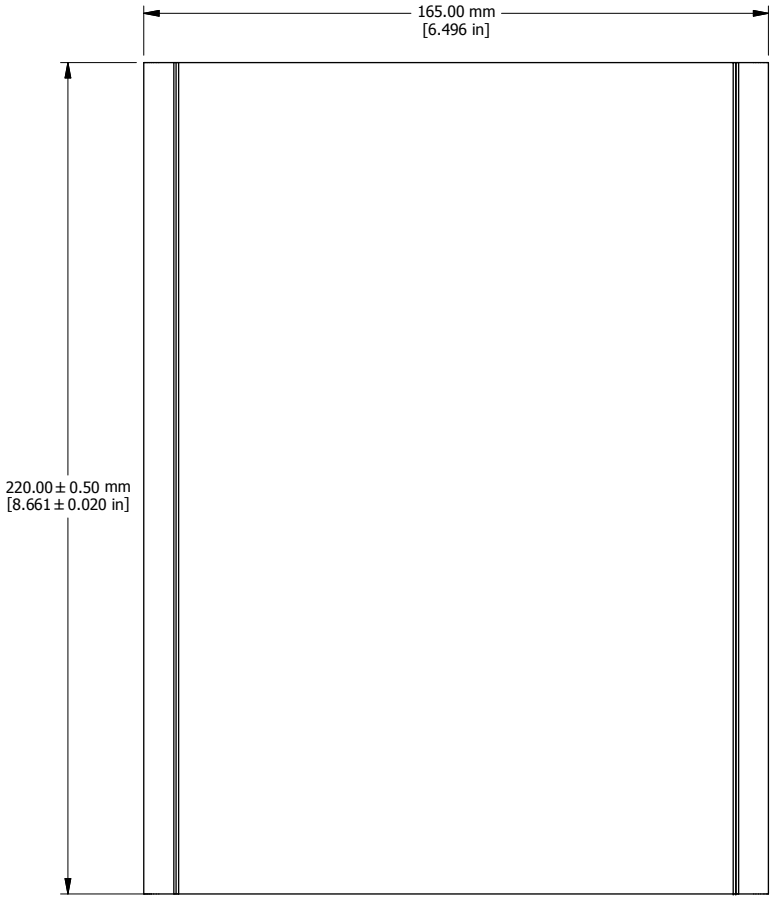

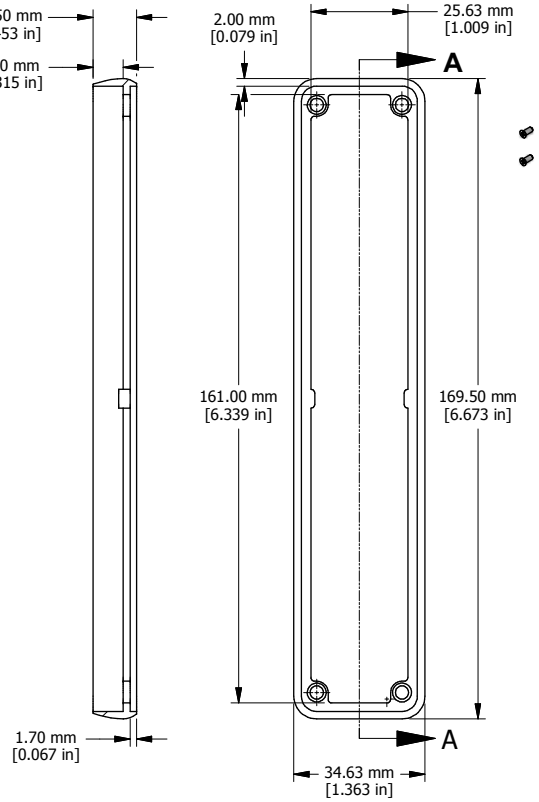

SECTION A-A

OPEN BEZEL

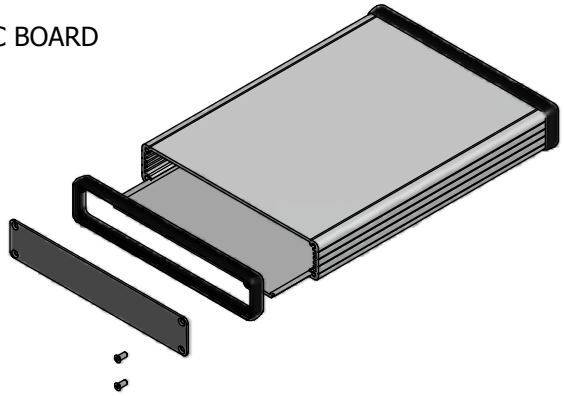

EXPLODED ASSEMBLY VIEW

Enclosures can be Factory Modified (Milling, Drilling, Printing etc.)
Solid models of this enclosure available in STEP or IGES.
Contact Factory mjm@hammondmfg.com

NOTE
Purchased assembly includes box, plastic bezels, end panels, #6 Taptight screws and self adhesive rubber feet.
Box made from Extruded Aluminum 6063.
Bezels made with polycarbonate.

1455R2201	
PART NUMBERS	
Clear Anodized	1455R2201
Black Anodized	1455R2201BK
Blue Anodized	1455R2201BU
ACCESSORIES	
See website for accessories.	

HAMMOND MANUFACTURING™

1455R2201

www.hammondmfg.com