For high temperatures
Resistant to oils, solvents, acids and chemicals
Seawater-resistant
For high mechanical stress
High corrosion-resistance



CE RoHS


Good chemical resistance


Corrosion-resistant


Mechanical resistance


Robust


Temperature-resistant

Application range
Chromium nickel steel cable gland with VITON® seal, specially designed for use under tough conditions.
Pharmaceutical and petrochemical industry
Offshore sector
Wind power plants
Brickworks

Design
Metric connection thread acc. to EN 50262

Note
Refer to the chart to find a suitable counter-nut for SKINDICHT® SM CrNi M

Remark
Viton® is a registered trademark of DuPont de Nemours
Photographs are not to scale and do not represent detailed images of the respective products.

PN 0486/01_03.10 ©2012 Lapp Group - Technical changes reserved
Photographs are not to scale and do not represent detailed images of the respective products.

Technical Data

Article designation / size:	12 x 1,5
Clamping range ØF (mm):	-
SW (mm):	17
Overall length, C (mm):	3
Thread length, D (mm):	3
Pieces / PU:	10
Caution:	The installation dimensions can be found in appendix T21
Material:	Body: chrome-nickel steel in accordance with DIN, material no. 1.4305 Inner seal: FPM O-ring: FPM
Protection rating:	IP 68 - 5 bar
Temperature range:	-25°C to +200°C

PN 0486/01_03.10 ©2012 Lapp Group - Technical changes reserved
Photographs are not to scale and do not represent detailed images of the respective products.



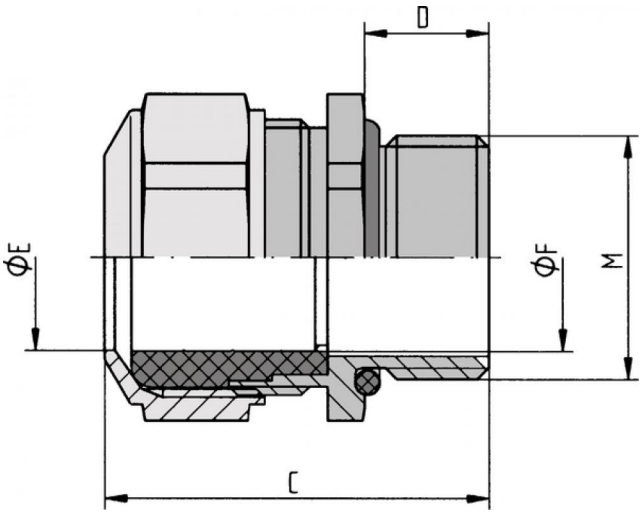

PN 0486/01_03.10 ©2012 Lapp Group - Technical changes reserved
Photographs are not to scale and do not represent detailed images of the respective products.