Device connector, front mounting - RF-17P1N8AWA00 - 1607860

Please be informed that the data shown in this PDF Document is generated from our Online Catalog. Please find the complete data in the user's documentation. Our General Terms of Use for Downloads are valid (http://download.phoenixcontact.com)



The figure shows the 12-pos. product version

Device connector, front mounting, straight, Screw locking, M23, Number of positions: 17, Type of contact: Male connector, Crimp connection, Axial O-ring, 4xØ3,2, shielded: Yes

Key commercial data

package_quantity	1
GTIN	4046356174947

Technical data

General

Note	Order information Order crimp contacts Ø 1 mm separately
Type of locking	Screw locking
Direction of rotation of contact chamber numbering	Standard
Coding	N
Contact connection method	Crimp connection
Type of contacts	Male connector
Number of positions	17
Contact diameter of power contacts	1 mm
Nominal current per power contact at 25°C	8 A
Mounting type	4xØ3,2

Ambient conditions

Ambient temperature	-20 °C ... 125 °C
Degree of protection	IP67

Material

Housing material	Turned parts: copper zinc alloy (CuZn), die-cast parts: zinc (GD-Zn)
Insulator material	PA 66
Gasket and O-ring material	FPM

Specifications according to DIN EN 61984:2001

Installation height max.	2000 m
Nominal / operating voltage of power contacts	100 V
Rated surge voltage of power contacts	1.5 kV

Device connector, front mounting - RF-17P1N8AWA00 - 1607860

Technical data

Specifications according to DIN EN 61984:2001

Surge voltage category of power contacts	III
Pollution degree of power contacts	3
Surge voltage category of signal contacts	III
Pollution degree of signal contacts	3

classifications

eCl@ss

eCl@ss 4.0	272607xx
eCl@ss 4.1	27260701
eCl@ss 5.0	27143424
eCl@ss 5.1	27143424
eCl@ss 6.0	27143424
eCl@ss 7.0	27440209
eCl@ss 8.0	27440209

ETIM

ETIM 3.0	EC001121
ETIM 4.0	EC001121
ETIM 5.0	EC002635

UNSPSC

UNSPSC 6.01	43172015
UNSPSC 7.0901	43201404
UNSPSC 11	43172015
UNSPSC 12.01	43201404
UNSPSC 13.2	43201404

approvals

UL Recognized / cUL Recognized / cULus Recognized /

Approval details

UL Recognized

Nominal voltage UN	125 V
Nominal current IN	1 A
mm²/AWG/kcmil	26

Device connector, front mounting - RF-17P1N8AWA00 - 1607860

approvals

cUL Recognized

Nominal voltage UN	125 V
Nominal current IN	1 A
mm²/AWG/kcmil	26

cULus Recognized

accessories

Crimp contact

SF-6CP2000 - 1605559



SF-10KP004 - 1607355



SF-6AP2000 - 1605554



Device connector, front mounting - RF-17P1N8AWA00 - 1607860

accessories

SF-10KP320 - 1615961



SF-10KP350 - 1615963



SF-10KP330 - 1615962



SF-10KP360 - 1615964



Protective cover

SF-Z0019 - 1607449



Device connector, front mounting - RF-17P1N8AWA00 - 1607860

accessories

RC-Z2059 - 1604225



RC-Z2469 - 1611797



RC-Z2068 - 1604236



RC-Z2062 - 1604228



Mounting material

RF-Z0017 - 1620624



Device connector, front mounting - RF-17P1N8AWA00 - 1607860

accessories

RF-Z0018 - 1620625



RF-Z0019 - 1620626



Drawings

Diagram

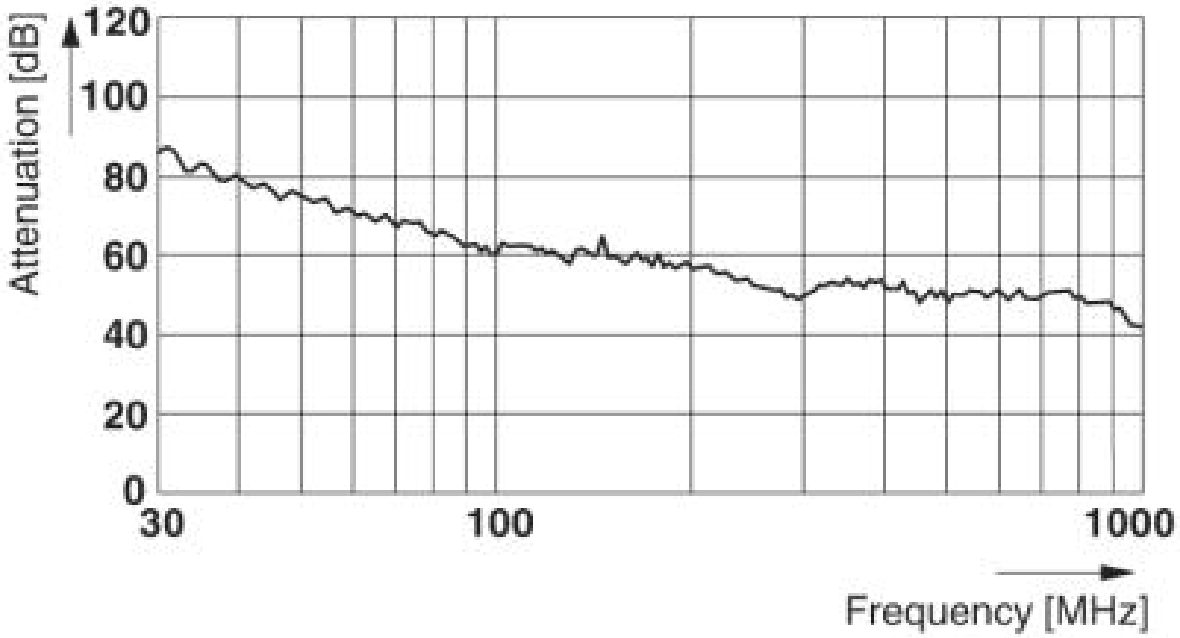

Device connector, front mounting - RF-17P1N8AWA00 - 1607860

Dimensioned drawing

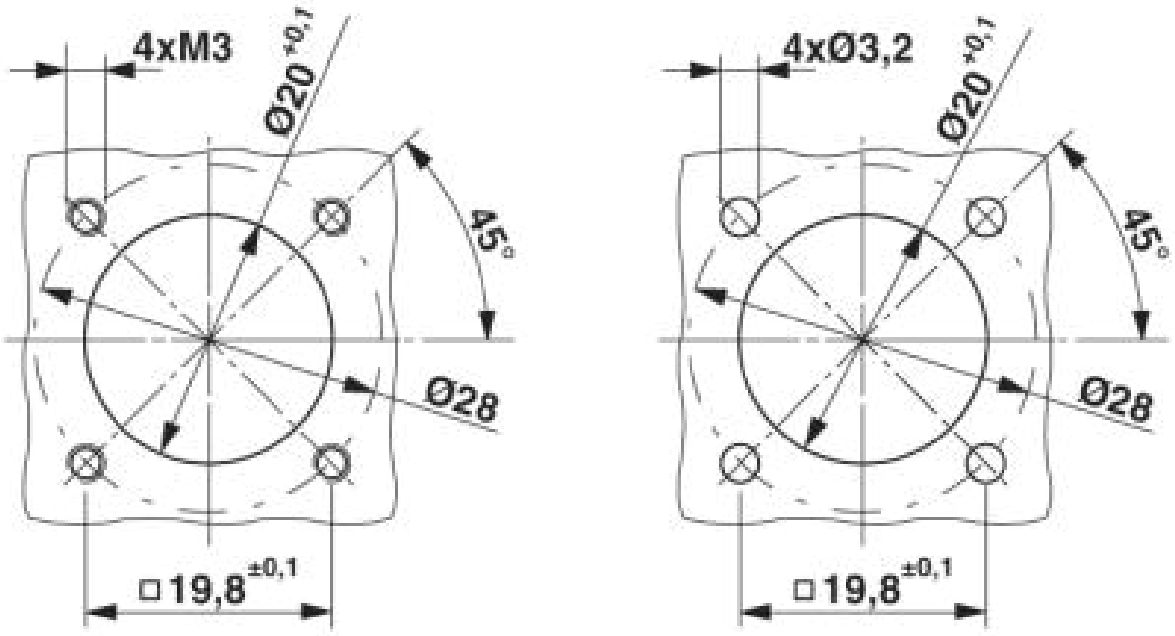

Installation dimensions

Dimensioned drawing

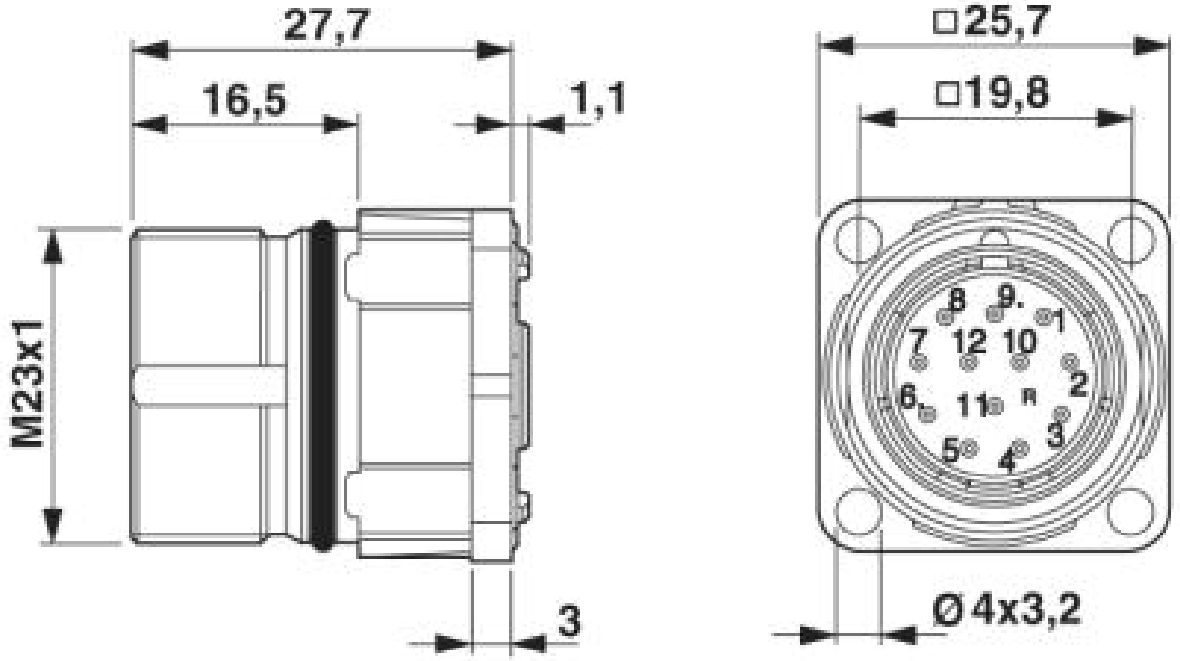

Dimensional drawing

Device connector, front mounting - RF-17P1N8AWA00 - 1607860

Schematic diagram

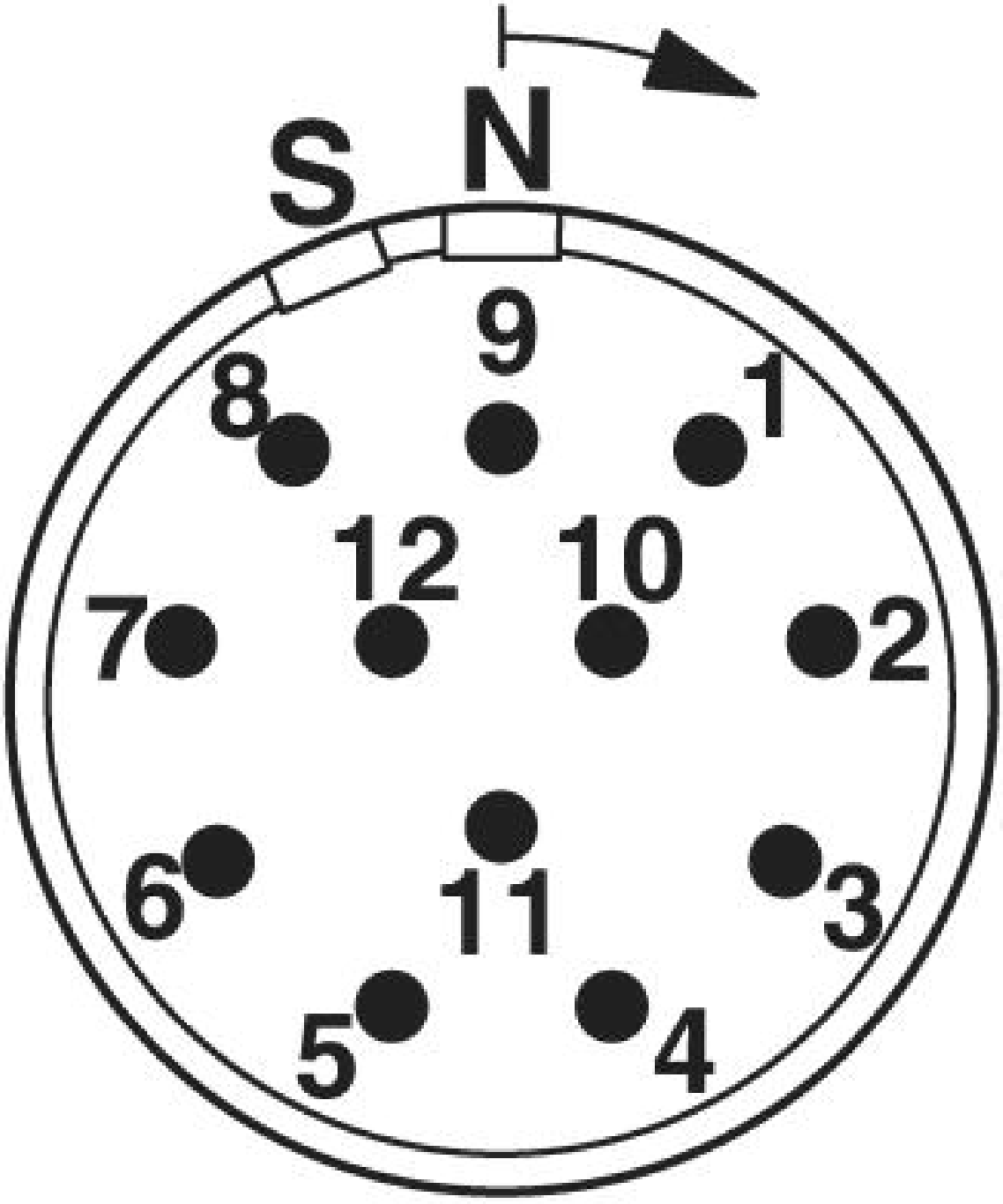

© Phoenix Contact 2014 - all rights reserved
http://www.phoenixcontact.com