DATASHEET

Product Description: Push Button Switch, Ring illuminated
Φ30mm,White 12V For Led,1NO1NC, Momentary. Version 6/14
Item no.98008C12

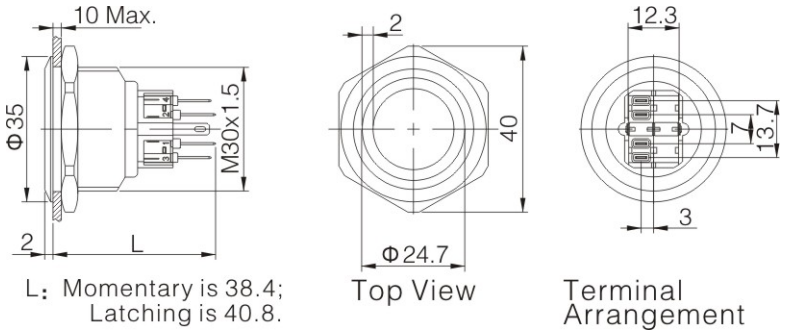

Specification …… GQ30-11E/W/12V
The Front Shape …… Flat Round
Terminal Type …… Pin Terminal(2.8×0.5mm)
Switching …… Za(double-break fast-motion changeover contact)
Switch Rating ……3A / 250VAC
Contact Resistance …….. ≤50m Ω
Insulation Resistance ..…… ≥1000M Ω
Dielectric Intensity …… 2000VAC
Operating and storage temperature……..…..…-20℃ ~ +55℃
Operating and storage humidity……....45 ~ 85% RH
Mechanical Life …….. 1,000,000 cycles
Electrical Life ……... 50,000 cycles
Panel Thickness …… 1~10mm
Operation Pressure …… About 5.5~7N
Operation Travel …… About 2.8mm
Contact Material …… Silver Alloy
Button Material ……... Stainless Steel
Crust Material …… Stainless Steel

This data sheet is a publication by Conrad Electronic SE, Klaus-Conrad-Str. 1, D-92240 Hirschau (www.conrad.com). All rights including translation reserved. Reproduction by any method, e.g. photocopy, microfilming, or the capture in electronic data processing systems require the prior written approval by the editor. Reprinting, also in part, is prohibited. This data represent the technical status at the time of printing. Changes in technology and equipment reserved.

Copyright 2013 by Conrad Electronic SE.