# DATASHEET - DC1-344D1NN-A20CE1



**Variable frequency drive, 400 V AC, 3-phase, 4.1 A, 1.5 kW, IP20/NEMA 0, FS1**

| | |
|---|---|
| **Part no.** | **DC1-344D1NN-A20CE1** |
| **Catalog No.** | **185724** |
| **Alternate Catalog No.** | **DC1-344D1NN-A20CE1** |
| **EL-Nummer (Norway)** | **4137021** |

## Delivery program

| | | | |
|---|---|---|---|
| Product range | | | Variable frequency drives |
| Part group reference (e.g. DIL) | | | DC1 |
| Rated operational voltage | $U_e$ | | 400 V AC, 3-phase<br>480 V AC, 3-phase |
| Output voltage with $V_e$ | $U_2$ | | 400 V AC, 3-phase<br>480 V AC, 3-phase |
| Mains voltage (50/60Hz) | $U_{LN}$ | V | 380 (-10%) - 480 (+10%) |
| **Rated operational current** | | | |
| At 150% overload | $I_e$ | A | 4.1 |
| Note | | | Rated operational current at a switching frequency of 8 kHz and an ambient air temperature of +50 °C |
| **Assigned motor rating** | | | |
| Note | | | for normal internally and externally ventilated 4 pole, three-phase asynchronous motors with 1500 $rpm^{-1}$ at 50 Hz or 1800 $min^{-1}$ at 60 Hz |
| Note | | | Overload cycle for 60 s every 600 s |
| Note | | | at 400 V, 50 Hz |
| 150 % Overload | P | kW | 1.5 |
| 150 % Overload | $I_M$ | A | 3.6 |
| Note | | | at 440 - 480 V, 60 Hz |
| 150 % Overload | P | HP | 2 |
| 150 % Overload | $I_M$ | A | 3.4 |
| Degree of Protection | | | IP20/NEMA0 |
| Interface/field bus (built-in) | | | OP-Bus (RS485)/Modbus RTU, CANopen® |
| Fieldbus connection (optional) | | | SmartWire-DT |
| Fitted with | | | 7-digital display assembly<br>Additional PCB protection |
| Parameterization | | | Keypad<br>Fieldbus<br>drivesConnect<br>drivesConnect mobile (App) |
| Frame size | | | FS1 |
| Connection to SmartWire-DT | | | yes<br>in conjunction with DX-NET-SWD3 SmartWire DT module |

## Technical data

### General

| | | | |
|---|---|---|---|
| Standards | | | Specification for general requirements: IEC/EN 61800-2<br>EMC requirements: IEC/EN 61800-3<br>Safety requirements: IEC/EN 61800-5-1 |
| Certifications | | | CE, UL, cUL, RCM, Ukr SEPRO, EAC |
| Production quality | | | RoHS, ISO 9001 |
| Climatic proofing | $\rho_w$ | % | < 95%, average relative humidity (RH), non-condensing, non-corrosive |
| Air quality | | | 3C2, 3S2 |
| Ambient temperature | | | |
| Operating ambient temperature min. | | °C | -10 |
| Operating ambient temperature max. | | °C | + 50 |
| | | | operation (with 150 % overload) |
| Storage | ϑ | °C | -40 - +60 |

| | | | |
|---|---|---|---|
| Mounting position | | | Vertical |
| Altitude | | m | 0 - 1000 m above sea level<br>Above 1000 m: 1% derating for every 100 m<br>max. 4000 m |
| Degree of Protection | | | IP20/NEMA0 |
| Protection against direct contact | | | BGV A3 (VBG4, finger- and back-of-hand proof) |

## Main circuit

| | | | |
|---|---|---|---|
| Supply | | | |
| Rated operational voltage | $U_e$ | | 400 V AC, 3-phase<br>480 V AC, 3-phase |
| Mains voltage (50/60Hz) | $U_{LN}$ | V | 380 (-10%) - 480 (+10%) |
| Input current (150% overload) | $I_{LN}$ | A | 5.6 |
| System configuration | | | AC supply systems with earthed center point |
| Supply frequency | $f_{LN}$ | Hz | 50/60 |
| Frequency range | $f_{LN}$ | Hz | 48 - 62 |
| Mains switch-on frequency | | | Maximum of one time every 30 seconds |
| Power section | | | |
| Function | | | Variable frequency drive with internal DC link and IGBT inverter |
| Overload current (150% overload) | $I_L$ | A | 6.15 |
| max. starting current (High Overload) | $I_H$ | % | 175 |
| Note about max. starting current | | | for 2,5 seconds every 600 seconds |
| Output voltage with $V_e$ | $U_2$ | | 400 V AC, 3-phase<br>480 V AC, 3-phase |
| Output Frequency | $f_2$ | Hz | 0 - 50/60 (max. 500) |
| Switching frequency | $f_{PWM}$ | kHz | 8<br>adjustable 4 - 32 (audible) |
| Operation Mode | | | U/f control<br>Speed control with slip compensation<br>sensorless vector control (SLV)<br>PM motors<br>Synchronous reluctance motors<br>BLDC motors |
| Frequency resolution (setpoint value) | Δf | Hz | 0.1 |
| Rated operational current | | | |
| At 150% overload | $I_e$ | A | 4.1 |
| Note | | | Rated operational current at a switching frequency of 8 kHz and an ambient air temperature of +50 °C |
| Power loss | | | |
| Heat dissipation at rated operational current $I_e$ =150 % | $P_V$ | W | 76.5 |
| Efficiency | η | % | 94.9 |
| Heat dissipation at current/speed [%] | | | |
| Current = 100% | | | |
| Speed = 0 % | $P_V$ | W | 36 |
| Speed = 50 % | $P_V$ | W | 46 |
| Speed = 90 % | $P_V$ | W | 49 |
| Current = 50 % | | | |
| Speed = 0 % | $P_V$ | W | 28 |
| Speed = 50 % | $P_V$ | W | 27 |
| Speed = 90 % | $P_V$ | W | 36 |
| Current = 50 % | | | |
| Speed = 0 % | $P_V$ | W | 20 |
| Speed = 50 % | $P_V$ | W | 27 |
| Maximum leakage current to ground (PE) without motor | $I_{PE}$ | mA | 13 |
| Fitted with | | | 7-digital display assembly<br>Additional PCB protection |
| Frame size | | | FS1 |
| Motor feeder | | | |
| Note | | | for normal internally and externally ventilated 4 pole, three-phase asynchronous motors with 1500 $rpm^{-1}$ at 50 Hz or 1800 $min^{-1}$ at 60 Hz |

| | | | |
|---|---|---|---|
| Note | | | Overload cycle for 60 s every 600 s |
| Note | | | at 400 V, 50 Hz |
| 150 % Overload | P | kW | 1.5 |
| Note | | | at 440 - 480 V, 60 Hz |
| 150 % Overload | P | HP | 2 |
| maximum permissible cable length | l | m | screened: 50<br>screened, with motor choke: 100<br>unscreened: 75<br>unscreened, with motor choke: 150 |
| Apparent power | | | |
| Apparent power at rated operation 400 V | S | kVA | 2.84 |
| Apparent power at rated operation 480 V | S | kVA | 3.41 |
| Braking function | | | |
| Standard braking torque | | | max. 30 % MN |
| DC braking torque | | | max. 100% of rated operational current $I_e$, variable |

## Control section

| | | | |
|---|---|---|---|
| Reference voltage | $U_s$ | V | 10 V DC (max. 10 mA) |
| Analog inputs | | | 2, parameterizable, 0 - 10 V DC, 0/4 - 20 mA |
| Analog outputs | | | 1, parameterizable, 0 - 10 V |
| Digital inputs | | | 4, parameterizable, max. 30 V DC |
| Digital outputs | | | 1, parameterizable, 24 V DC |
| Relay outputs | | | 1, parameterizable, N/O, 6 A (250 V, AC-1) / 5 A (30 V, DC-1) |
| Interface/field bus (built-in) | | | OP-Bus (RS485)/Modbus RTU, CANopen® |

## Assigned switching and protective elements

| | | | |
|---|---|---|---|
| Power Wiring | | | |
| Safety device (fuse or miniature circuit-breaker) | | | |
| IEC (Type B, gG), 150 % | | | FAZ-B10/3 |
| UL (Class CC or J) | | A | 6 |
| Mains contactor | | | |
| 150 % overload (CT/$I_H$, at 50 °C) | | | DILM7<br>DILEM-10 |
| Main choke | | | |
| 150 % overload (CT/$I_H$, at 50 °C) | | | DX-LN3-006 |
| Radio interference suppression filter (external, 150 %) | | | DX-EMC34-008 |
| Radio interference suppression filter, low leakage currents (external, 150 %) | | | DX-EMC34-008-L |
| Note regarding radio interference suppression filter | | | Optional external radio interference suppression filter for longer motor cable lengths and for use in different EMC environments |
| Motor feeder | | | |
| motor choke | | | |
| 150 % overload (CT/$I_H$, at 50 °C) | | | DX-LM3-008 |
| Sine filter | | | |
| 150 % overload (CT/$I_H$, at 50 °C) | | | DX-SIN3-010 |

# Design verification as per IEC/EN 61439

| | | | |
|---|---|---|---|
| Technical data for design verification | | | |
| Rated operational current for specified heat dissipation | $I_n$ | A | 4.1 |
| Heat dissipation per pole, current-dependent | $P_{vid}$ | W | 0 |
| Equipment heat dissipation, current-dependent | $P_{vid}$ | W | 76.5 |
| Static heat dissipation, non-current-dependent | $P_{vs}$ | W | 0 |
| Heat dissipation capacity | $P_{diss}$ | W | 0 |
| Operating ambient temperature min. | | °C | -10 |
| Operating ambient temperature max. | | °C | 50 |
| | | | Operation (with 150 % overload) |
| IEC/EN 61439 design verification | | | |
| 10.2 Strength of materials and parts | | | |
| 10.2.2 Corrosion resistance | | | Meets the product standard's requirements. |
| 10.2.3.1 Verification of thermal stability of enclosures | | | Meets the product standard's requirements. |

| | | |
|---|---|---|
| 10.2.3.2 Verification of resistance of insulating materials to normal heat | | Meets the product standard's requirements. |
| 10.2.3.3 Verification of resistance of insulating materials to abnormal heat and fire due to internal electric effects | | Meets the product standard's requirements. |
| 10.2.4 Resistance to ultra-violet (UV) radiation | | Meets the product standard's requirements. |
| 10.2.5 Lifting | | Does not apply, since the entire switchgear needs to be evaluated. |
| 10.2.6 Mechanical impact | | Does not apply, since the entire switchgear needs to be evaluated. |
| 10.2.7 Inscriptions | | Meets the product standard's requirements. |
| 10.3 Degree of protection of ASSEMBLIES | | Does not apply, since the entire switchgear needs to be evaluated. |
| 10.4 Clearances and creepage distances | | Meets the product standard's requirements. |
| 10.5 Protection against electric shock | | Does not apply, since the entire switchgear needs to be evaluated. |
| 10.6 Incorporation of switching devices and components | | Does not apply, since the entire switchgear needs to be evaluated. |
| 10.7 Internal electrical circuits and connections | | Is the panel builder's responsibility. |
| 10.8 Connections for external conductors | | Is the panel builder's responsibility. |
| 10.9 Insulation properties | | |
| 10.9.2 Power-frequency electric strength | | Is the panel builder's responsibility. |
| 10.9.3 Impulse withstand voltage | | Is the panel builder's responsibility. |
| 10.9.4 Testing of enclosures made of insulating material | | Is the panel builder's responsibility. |
| 10.10 Temperature rise | | The panel builder is responsible for the temperature rise calculation. Eaton will provide heat dissipation data for the devices. |
| 10.11 Short-circuit rating | | Is the panel builder's responsibility. The specifications for the switchgear must be observed. |
| 10.12 Electromagnetic compatibility | | Is the panel builder's responsibility. The specifications for the switchgear must be observed. |
| 10.13 Mechanical function | | The device meets the requirements, provided the information in the instruction leaflet (IL) is observed. |

## Technical data ETIM 7.0

| Low-voltage industrial components (EG000017) / Frequency converter =< 1 kV (EC001857) | | |
|---|---|---|
| Electric engineering, automation, process control engineering / Electrical drive / Static frequency converter / Static frequency converter = < 1 kV (ecl@ss10.0.1-27-02-31-01 [AKE177014]) | | |
| Mains voltage | V | 342 - 528 |
| Mains frequency | | 50/60 Hz |
| Number of phases input | | 3 |
| Number of phases output | | 3 |
| Max. output frequency | Hz | 500 |
| Max. output voltage | V | 500 |
| Nominal output current I2N | A | 4.1 |
| Max. output at quadratic load at rated output voltage | kW | 1.5 |
| Max. output at linear load at rated output voltage | kW | 1.5 |
| Relative symmetric net frequency tolerance | % | 10 |
| Relative symmetric net voltage tolerance | % | 10 |
| Number of analogue outputs | | 1 |
| Number of analogue inputs | | 2 |
| Number of digital outputs | | 1 |
| Number of digital inputs | | 4 |
| With control unit | | Yes |
| Application in industrial area permitted | | Yes |
| Application in domestic- and commercial area permitted | | No |
| Supporting protocol for TCP/IP | | No |
| Supporting protocol for PROFIBUS | | No |
| Supporting protocol for CAN | | Yes |
| Supporting protocol for INTERBUS | | No |
| Supporting protocol for ASI | | No |
| Supporting protocol for KNX | | No |
| Supporting protocol for MODBUS | | Yes |
| Supporting protocol for Data-Highway | | No |
| Supporting protocol for DeviceNet | | No |
| Supporting protocol for SUCONET | | No |

| | | |
|---|---|---|
| Supporting protocol for LON | | No |
| Supporting protocol for PROFINET IO | | No |
| Supporting protocol for PROFINET CBA | | No |
| Supporting protocol for SERCOS | | No |
| Supporting protocol for Foundation Fieldbus | | No |
| Supporting protocol for EtherNet/IP | | Yes |
| Supporting protocol for AS-Interface Safety at Work | | No |
| Supporting protocol for DeviceNet Safety | | No |
| Supporting protocol for INTERBUS-Safety | | No |
| Supporting protocol for PROFIsafe | | No |
| Supporting protocol for SafetyBUS p | | No |
| Supporting protocol for BACnet | | No |
| Supporting protocol for other bus systems | | Yes |
| Number of HW-interfaces industrial Ethernet | | 0 |
| Number of interfaces PROFINET | | 0 |
| Number of HW-interfaces RS-232 | | 0 |
| Number of HW-interfaces RS-422 | | 0 |
| Number of HW-interfaces RS-485 | | 1 |
| Number of HW-interfaces serial TTY | | 0 |
| Number of HW-interfaces USB | | 0 |
| Number of HW-interfaces parallel | | 0 |
| Number of HW-interfaces other | | 0 |
| With optical interface | | No |
| With PC connection | | Yes |
| Integrated breaking resistance | | No |
| 4-quadrant operation possible | | No |
| Type of converter | | U converter |
| Degree of protection (IP) | | IP20 |
| Degree of protection (NEMA) | | Other |
| Height | mm | 184 |
| Width | mm | 81 |
| Depth | mm | 124 |

## Approvals

| | | |
|---|---|---|
| Product Standards | | UL 508C; CSA-C22.2 No. 14; IEC/EN61800-3; IEC/EN61800-5; CE marking |
| UL File No. | | E172143 |
| UL Category Control No. | | NMMS, NMMS7 |
| CSA File No. | | UL report applies to both US and Canada |
| North America Certification | | UL listed, certified by UL for use in Canada |
| Specially designed for North America | | No |
| Suitable for | | Branch circuits |
| Max. Voltage Rating | | 3~ 480 V AC IEC: TN-S UL/CSA: "Y" (Solidly Grounded Wey) |
| Degree of Protection | | IEC: IP20 |

## Dimensions

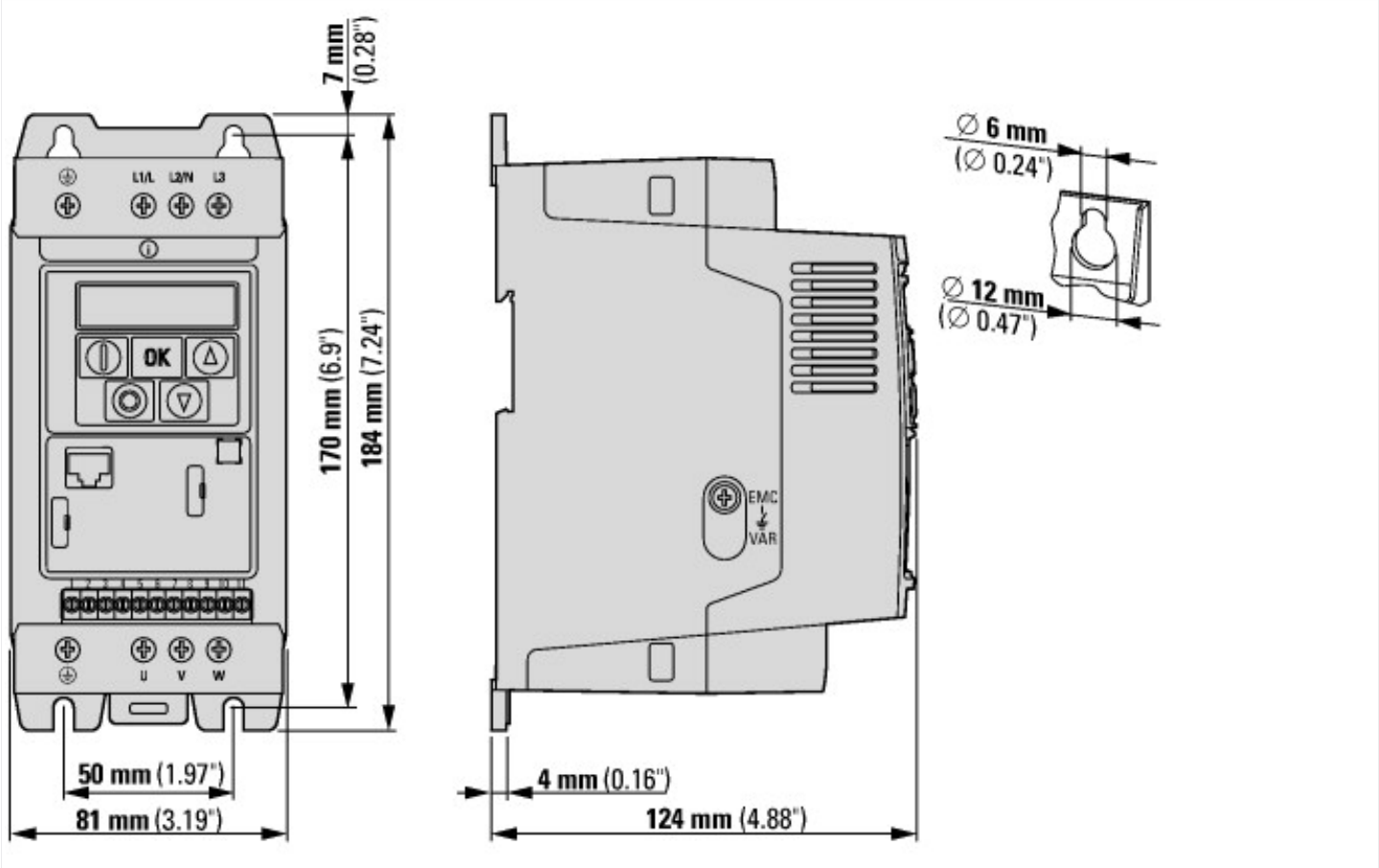



© 06/2021 by Eaton Industries GmbH